Technical data sheet
Reduction, PG thread

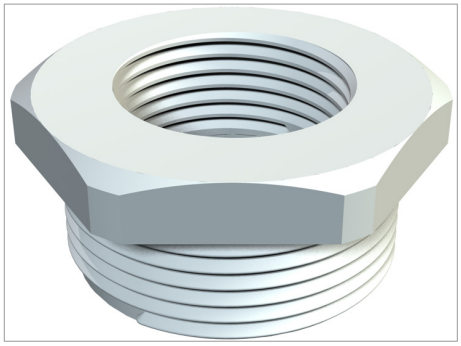

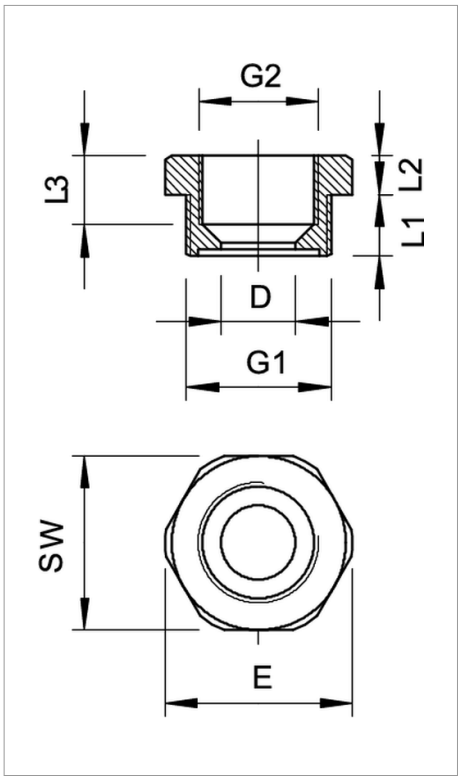

Reduction, Pg internal and external thread to DIN 40430.

Type	External thread	Internal thread	Colour	Box quantity	Pack. pcs	Weight kg/100 pcs.	Art.-No.
107 R PG11- 7 PA	Pg 11	Pg 7	Light grey; RAL 7035	500	50	0.400	2030705
107 R PG13- 9 PA	Pg 13,5	Pg 9	Light grey; RAL 7035	1200	50	0.450	2030713
107 R PG16- 9 PA	Pg 16	Pg 9	Light grey; RAL 7035	1000	50	0.600	2030748
107 R PG16-11 PA	Pg 16	Pg 11	Light grey; RAL 7035	1000	50	0.480	2030756
107 R PG21-11 PA	Pg 21	Pg 11	Light grey; RAL 7035	1000	50	0.910	2030764
107 R PG21-13 PA	Pg 21	Pg 13,5	Light grey; RAL 7035	500	50	0.800	2030772
107 R PG21-16 PA	Pg 21	Pg 16	Light grey; RAL 7035	500	50	0.650	2030780
107 R PG29-16 PA	Pg 29	Pg 16	Light grey; RAL 7035	600	50	1.460	2030799
107 R PG29-21 PA	Pg 29	Pg 21	Light grey; RAL 7035	250	25	1.500	2030802
107 R PG36-21 PA	Pg 36	Pg 21	Light grey; RAL 7035	300	25	2.350	2030829
107 R PG36-29 PA	Pg 36	Pg 29	Light grey; RAL 7035	300	25	2.200	2030810
107 R PG42-29 PA	Pg 42	Pg 29	Light grey; RAL 7035	300	25	2.350	2030837

PA Polyamide /100