Technical data sheet
Locknut, metric thread

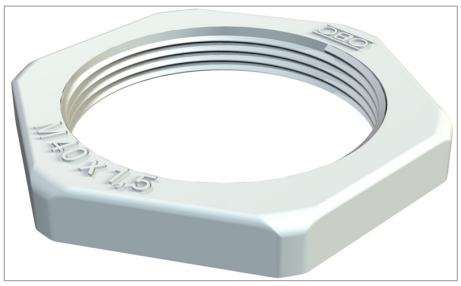

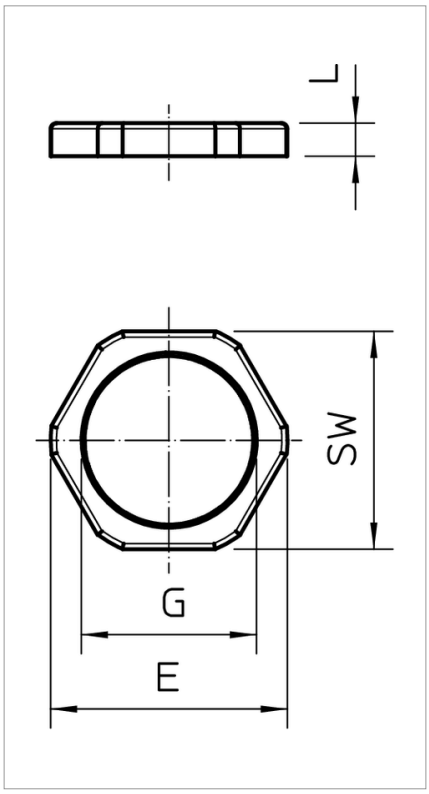

Locknut DIN 46319, with metric thread IEC 423.

Type	Thread	Colour	SW mm	Dimension E mm	Dimension L mm	Box quantity	Pack. pcs	Weight kg/100 pcs.	Art.-No.
116 M12 LGR PS	M12 x 1,5	Light grey; RAL 7035	17	19	5	2000	100	0.100	2049503
116 M16 LGR PS	M16 x 1,5	Light grey; RAL 7035	22	25	5	1000	100	0.160	2049511
116 M20 LGR PS	M20 x 1,5	Light grey; RAL 7035	26	29	6	1200	100	0.194	2049538
116 M25 LGR PS	M25 x 1,5	Light grey; RAL 7035	32	36	6.5	1000	100	0.297	2049546
116 M32 LGR PS	M32 x 1,5	Light grey; RAL 7035	41	46	7	500	50	0.610	2049554
116 M40 LGR PS	M40 x 1,5	Light grey; RAL 7035	50	56	7	250	25	1.683	2049562
116 M50 LGR PS	M50 x 1,5	Light grey; RAL 7035	60	68	8	250	25	0.652	2049570
116 M63 LGR PS	M63 x 1,5	Light grey; RAL 7035	75	83	8	200	25	1.830	2049589

PS Polystyrene /100