Technical data sheet
Cable gland, PG thread

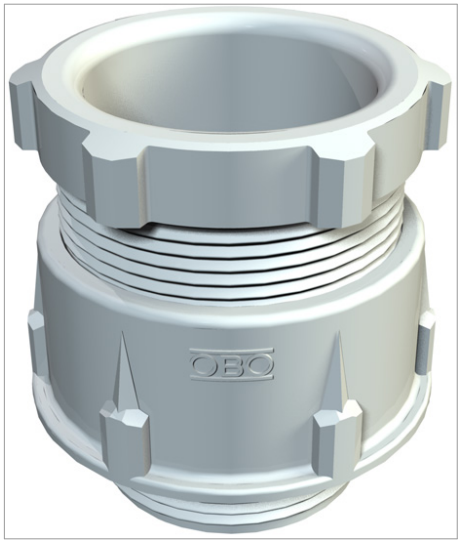

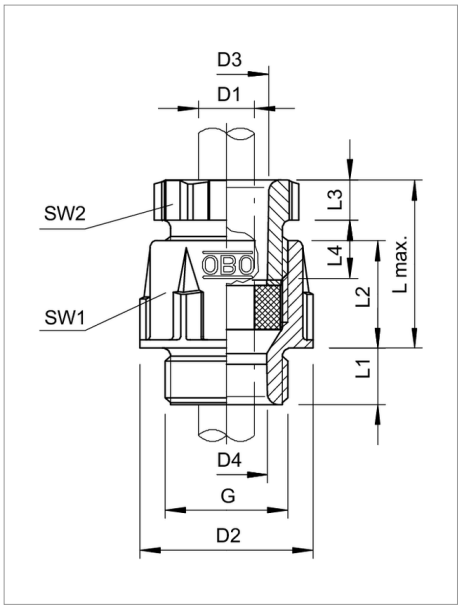

Standard cable gland, shape A, to DIN 46320 with simple NR/SBR sealing ring PG connection thread to DIN 40430.
Protection rating: with connection thread sealing ring IP65, without connection thread sealing ring IP54.

Type	Thread	Colour	Box quantity	Pack. pcs	Weight kg/100 pcs.	Art.-No.
106 VDE PG9 PA	Pg 9	Light grey; RAL 7035	600	50	0.610	2036517
106 VDE PG11 PA	Pg 11	Light grey; RAL 7035	500	50	0.870	2036533
106 VDE PG13 PA	Pg 13,5	Light grey; RAL 7035	600	50	1.060	2036576
106 VDE PG16 PA	Pg 16	Light grey; RAL 7035	600	50	1.370	2036592
106 VDE PG21 PA	Pg 21	Light grey; RAL 7035	600	50	2.330	2036614
106 VDE PG29 PA	Pg 29	Light grey; RAL 7035	120	10	3.830	2036630
106 VDE PG36 PA	Pg 36	Light grey; RAL 7035	80	10	7.800	2036657

PA Polyamide /100