MITSUBISHI

MELSECNET/H Network Module

User's Manual
(Hardware)

QJ71NT11B

Thank you for purchasing the Mitsubishi programmable controller MELSEC-Q Series.

Prior to use, please read both this manual and detailed manual thoroughly and familiarize yourself with the product.

MELSEC-Q
Mitsubishi Programmable Controller

MODEL	QJ71NT11B-U-HW
MODEL CODE	13JY93
IB(NA)-0800440-A(0810)MEE	

● SAFETY PRECAUTIONS ●

(Always read these instructions before using this equipment.)

Before using this product, please read this manual and the relevant manuals introduced in this manual carefully and pay full attention to safety to handle the product correctly.
Precautionary notes in this manual cover only the installations of this product.
For precautions on designing and discarding this product, refer to "Safety Precautions" in the MELSECNET/H Reference Manual.
For the safety instructions of the programmable controller system, please read the CPU module user's manual.
In this manual, the safety instructions are ranked as "DANGER" and "CAUTION".

DANGER	Indicates that incorrect handling may cause hazardous conditions, resulting in death or severe injury.
CAUTION	Indicates that incorrect handling may cause hazardous conditions, resulting in medium or slight personal injury or physical damage.

Note that the **CAUTION** level may lead to a serious consequence according to the circumstances.
Always follow the instructions of both levels because they are important to personal safety.
Please save this manual to make it accessible when required and always forward it to the end user.

[Installation Precautions]

⚠CAUTION
● Use the programmable controller in the operating environment that meets the general specifications given in the user's manual of the CPU module. Using this programmable controller in an environment outside the range of the general specifications could result in electric shock, fire, erroneous operation, and damage to or deterioration of the product. ● While pressing the installation lever located at the bottom of module, insert the module fixing tab into the fixing hole in the base unit until it stops. Then, securely mount the module with the fixing hole as a supporting point. Incorrect loading of the module can cause a malfunction, failure or drop. When using the programmable controller in the environment of much vibration, tighten the module with a screw. Tighten the screw in the specified torque range. Undertightening can cause a drop, short circuit or malfunction. Overtightening can cause a drop, short circuit or malfunction due to damage to the screw or module. ● Completely turn off the externally supplied power used in the system before mounting or removing the module. Not doing so could result in damage to the product. ● Do not directly touch the module's conductive parts or electronic components. Touching the conductive parts could cause an operation failure or give damage to the module. ● Completely turn off the externally supplied power used in the system when installing or placing wiring. Failure to do so may cause malfunction or failure of the module.

[Wiring Precautions]

⚠DANGER

- Completely turn off the externally supplied power used in the system when installing or placing wiring.
  Failure to do so may cause electric shocks or damage the product.

⚠CAUTION

- Always connect the FG terminals to the ground using class D (class 3) or higher grounding exclusively designed for programmable controller.
  Failure to do so may cause malfunctions.
- When connecting cables to the terminal block for external power supply, check the rated voltage and terminal layout of the product for correct wiring.
  Connecting a power supply that is different from the rating or incorrectly wiring the product could result in fire or damage.
- Tighten the terminal screws with the specified torque.
  If the terminal screws are loose, it could result in short circuits, fire, or erroneous operation.
- Solder coaxial cable connectors properly. Incomplete soldering may result in malfunctioning.
- Be sure there are no foreign substances such as sawdust or wiring debris inside the module.
  Such debris could cause fires, damage, or erroneous operation.
- The module has an ingress prevention label on its top to prevent foreign matter, such as wire offcuts, from entering the module during wiring.
  Do not peel this label during wiring.
  Before starting system operation, be sure to peel this label because of heat dissipation.
- Make sure to place the communication and power cables into a duct or fasten them using a clamp. Failure to do so may damage the module or cables by pulling a dangling cable inadvertently or cause the module to malfunction due to bad connection.
- When disconnecting the communication and power cables from the module, do not pull a cable part by hand.
  When disconnecting a cable with a connector, hold the connector connected to the module by hand and pull it out to remove the cable. When disconnecting a cable connected to a terminal block, loosen the screws on the terminal block first before removing the cable. If a cable is pulled while being connected to the module, it may cause the module to malfunction or damage the module and cables.

Revisions

* The manual number is noted at the lower right of the top cover.

Print Date	*Manual Number	Revision
Oct., 2008	IB(NA)-0800440-A	First edition

CONTENTS

About Manuals

The following manuals are also related to this product.
Use this table to order necessary manuals to the functions used.

Related Manuals

Manual name	Manual No. (Model code)
Q corresponding MELSECNET/H Network System Reference Manual (PLC to PLC network)	SH-080049 (13JF92)

Compliance with the EMC and Low Voltage Directives

(1) For programmable controller system
To configure a system meeting the requirements of the EMC and Low Voltage Directives when incorporating the Mitsubishi programmable controller (EMC and Low Voltage Directives compliant) into other machinery or equipment, refer to Chapter 9 "EMC AND LOW VOLTAGE DIRECTIVES" of the QCPU User's Manual (Hardware Design, Maintenance and Inspection).
The CE mark, indicating compliance with the EMC and Low Voltage Directives, is printed on the rating plate of the programmable controller.

(2) For the product
No additional measures are necessary for the compliance of this product with the EMC and Low Voltage Directives.

1. OVERVIEW

This manual explains how to handle the MELSECNET/H network module, model number QJ71NT11B (hereinafter referred to as the network module).
The network module is used as a control/normal station in the PLC to PLC network in the MELSECNET/H system.
After unpacking the network module, confirm that the following products are enclosed.

Model name	Part name	Quantity
QJ71NT11B	Model QJ71NT11B MELSECNET/H network module (Twisted bus type)	1
	Terminal resistor 110Ω, 1/2W(brown, brown, brown)	1

2. PERFORMANCE SPECIFICATIONS

The following table shows the performance specifications for the network module:

<table>
<tr><th colspan="2" rowspan="2">Item</th><th>Specifications</th></tr>
<tr><th>QJ71NT11B</th></tr>
<tr><td colspan="2">Maximum number of link points per network</td><td><table><tr><th></th><th>MELSECNET/H mode, MELSECNET/H Extended mode*1</th></tr><tr><td>LX/LY</td><td>8192 points</td></tr><tr><td>LB</td><td>16384 points</td></tr><tr><td>LW</td><td>16384 points</td></tr></table></td></tr>
<tr><td>Maximum number of link points per station</td><td>PLC to PLC network</td><td>• MELSECNET/H mode
{(LY+ LB) /8 + (2 × LW)} ≦ 2000 bytes *2
• MELSECNET/H Extended mode
{(LY+ LB) /8 + (2 × LW)} ≦ 35840 bytes *2</td></tr>
<tr><td colspan="2">Communication speed</td><td>156kbps/312kbps/625kbps/1.25Mbps/2.5Mbps/5Mbps/10Mbps
(Switched by network parameters)</td></tr>
<tr><td colspan="2">Communication method</td><td>Token bus</td></tr>
<tr><td colspan="2">Synchronous method</td><td>Frame synchronous</td></tr>
<tr><td colspan="2">Transmission path format</td><td>Bus (RS-485)</td></tr>
<tr><td colspan="2">Maximum number of networks</td><td>239</td></tr>
<tr><td colspan="2">Maximum number of groups</td><td>32</td></tr>
<tr><td>Number of stations per network</td><td>PLC to PLC network</td><td>32 stations (Control station: 1, Normal station: 31)</td></tr>
<tr><td colspan="2">Overall distance for one network</td><td><table><tr><th>Communication speed</th><th>Twisted pair cable</th><th>Version 1.10 compatible CC-Link dedicated cable</th></tr><tr><td>156kbps *3</td><td>1200m</td><td>1200m</td></tr><tr><td>312kbps</td><td>600m</td><td>900m</td></tr><tr><td>625kbps</td><td>400m</td><td>600m</td></tr><tr><td>1.25Mbps</td><td>200m</td><td>400m</td></tr><tr><td>2.5Mbps</td><td rowspan="3">-
(Not applicable)</td><td>200m</td></tr><tr><td>5Mbps</td><td>150m</td></tr><tr><td>10Mbps</td><td>100m</td></tr></table></td></tr>
<tr><td colspan="2">Connection cable</td><td>Twisted pair cable (optional), Version 1.10 compatible CC-Link dedicated cable (optional)*4</td></tr>
<tr><td colspan="2">Number of I/O occupied points</td><td>32 points (I/O assignment: intelligent 32 points)</td></tr>
<tr><td colspan="2">Internal current consumption (5VDC)</td><td>0.6A</td></tr>
<tr><td colspan="2">External dimensions</td><td>98 (3.86) (H) × 27.4 (1.08) (W) × 90 (3.54) (D) [mm (inch)]</td></tr>
<tr><td colspan="2">Weight</td><td>0.13kg</td></tr>
</table>

*1: Mode selection is performed using network parameters.
*2: The number of LY points of the stations set in the I/O master station is the sum total of the LY points for output to all stations within the block.
*3: This value is set as default of the communication speed.
*4: For details of cable specifications, refer to Section 5.1 or Section 5.2 in this manual.

For general specifications of the network module, refer to the user's manual for the CPU used.

3. HANDLING

⚠CAUTION

- Use the programmable controller in the operating environment that meets the general specifications given in the user's manual of the CPU module. Using this programmable controller in an environment outside the range of the general specifications could result in electric shock, fire, erroneous operation, and damage to or deterioration of the product.
- While pressing the installation lever located at the bottom of module, insert the module fixing tab into the fixing hole in the base unit until it stops. Then, securely mount the module with the fixing hole as a supporting point. Incorrect loading of the module can cause a malfunction, failure or drop. When using the programmable controller in the environment of much vibration, tighten the module with a screw. Tighten the screw in the specified torque range. Undertightening can cause a drop, short circuit or malfunction. Overtightening of screws can cause damages to the screws and/or the module, resulting in fallout, short circuits, or malfunction.
- Completely turn off the externally supplied power used in the system before mounting or removing the module. Failure to do so may damage the product.
- Do not directly touch the conducting parts and electronic parts of the module. This may cause the module to malfunction or fail.

3.1 Handling Precautions

(1) Since the module case is made of resin, do not drop it or subject it to strong impact.

(2) Do not remove the printed-circuit board of the module from the case.
Doing so will cause failure.

(3) Be sure there are no foreign substances such as sawdust or wiring debris inside the module.
Such debris could cause fires, damage, or erroneous operation.

(4) The module has an ingress prevention label on its top to prevent foreign matter, such as wire offcuts, from entering the module during wiring.
Do not peel this label during wiring.
Before starting system operation, be sure to peel this label because of heat dissipation.

(5) Before handling the module, touch a grounded metal object to discharge the static electricity from the human body.
Not doing so may cause a failure or malfunction of the module.

(6) Tighten the screws such as module fixing screws within the following ranges.

Screw location	Tightening torque range
Module fixing screw (M3 screw)*1	0.36 to 0.48 N•m
Spring clamp terminal block fixing screw (M4 screw)	0.78 to 1.18 N•m

*1: The module can be easily fixed onto the base unit using the hook at the top of the module.
However, it is recommended to secure the module with the module fixing screw if the module is subject to significant vibration.

4. PART NAME

<QJ71NT11B>

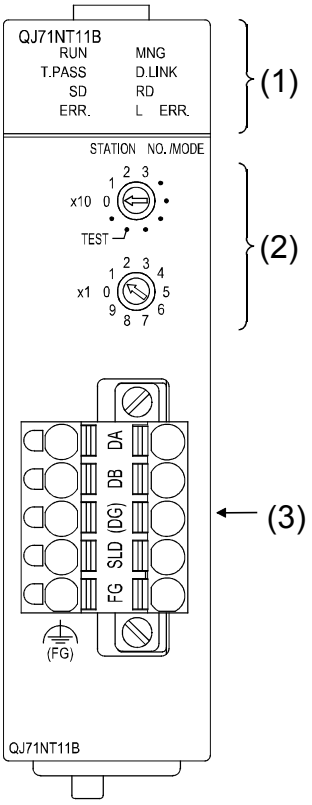

(1) Indicator LED

LED	Indication
RUN	On : Module operating normally Off : Watchdog timer error (hardware error)
T. PASS	On : Executing baton pass Flash : Testing Off : Baton pass not yet executed (host is disconnecting)
SD	On : Sending data Off : Not sending data
ERR.	On : Setting error Flash : • Error detected by a test • Station number/Mode setting switch(s) is changed during operation Off : No setting error
MNG	On : Operating as a control station, sub-control station Off : Operating as a normal station
D. LINK	On : In data link Off : Not in data link
RD	On : Receiving data Off : Not receiving data
L ERR.	On : Communication error Off : No communication error

(2) Station number/Mode setting switches
Used to set the station number and mode of the network module. (Factory default setting: 1)

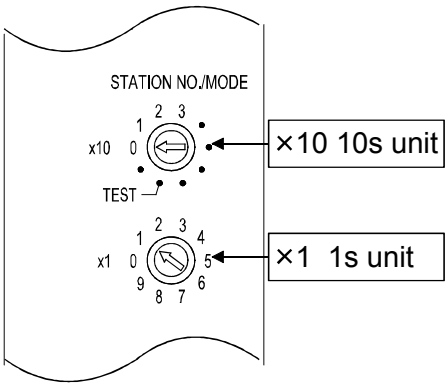

Setting range		Indication
×10	×1	
0	0	Setting error (The ERR. LED turns on.)
0	1	Station number 1 to 32 (online.)
to		
3	2	
3	3 to 9	Setting error (The ERR. LED turns on.) *1
•	0 to 9	
TEST	0 to 6	
TEST	7	Self-loopback test
TEST	8	Internal self-loopback test
TEST	9	Hardware test

*1: Station number 33 to 64 will result in a setting error. However, the ERR. LED will not turn on.

(3) Spring clamp terminal block
Used to connect a twisted pair cable or Version 1.10 compatible CC-Link dedicated cable. (Refer to Section 5.1.2 (2)(b))

5. WIRING

⚠DANGER

- Completely turn off the externally supplied power used in the system when installing or placing wiring.
  Failure to do so may cause electric shocks or damage the product.

⚠CAUTION

- Always connect the FG terminals to the ground using class D (class 3) or higher grounding exclusively designed for programmable controller.
  Failure to do so may cause malfunctions.
- When connecting cables to the terminal block for external power supply, check the rated voltage and terminal layout of the product for correct wiring.
  Connecting a power supply that is different from the rating or incorrectly wiring the product could result in fire or damage.
- Tighten the terminal screws with the specified torque.
  If the terminal screws are loose, it could result in short circuits, fire, or erroneous operation.
- Solder coaxial cable connectors properly. Incomplete soldering may result in malfunctioning.
- Be sure there are no foreign substances such as sawdust or wiring debris inside the module. Such debris could cause fires, damage, or erroneous operation.
- The module has an ingress prevention label on its top to prevent foreign matter, such as wire offcuts, from entering the module during wiring.
  Do not peel this label during wiring.
  Before starting system operation, be sure to peel this label because of heat dissipation.
- Make sure to place the communication and power cables into a duct or fasten them using a clamp. Failure to do so may damage the module or cables by pulling a dangling cable inadvertently or cause the module to malfunction due to bad connection.
- When disconnecting the communication and power cables from the module, do not pull a cable part by hand.
  When disconnecting a cable with a connector, hold the connector connected to the module by hand and pull it out to remove the cable. When disconnecting a cable connected to a terminal block, loosen the screws on the terminal block first before removing the cable. If a cable is pulled while being connected to the module, it may cause the module to malfunction or damage the module and cables.

5.1 Twisted Bus System (When using twisted pair cable)

5.1.1 Specifications of twisted pair cable

The following shows the specifications of a shielded twisted pair cable used in the twisted bus system.

Twisted pair cables that satisfy the following specifications can also be used even not introduced.

Item	KNPEV-SB 0.5SQ × 1P*1
Cross section	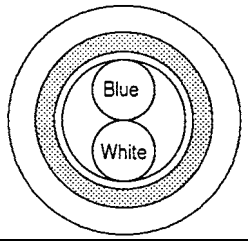
Cable	Shielded twisted pair cable
Core	2-core
Conductor resistance (20℃)	39.4Ω/km or less
Insulation resistance (20℃)	10MΩkm or more
Dielectric withstand voltage V-min	1000VAC 1 minute
Capacitance (1KHz)	70nF/km or less on average
Characteristic impedance (100KHz)	110±10Ω

*1: Applicable only when the communication speed is 1.25Mbps or less.

5.1.2 Precautions for wiring twisted pair cable

(1) Wiring precautions

(a) Wiring shielded twisted pair cable

When wiring a shielded twisted pair cable, ensure to prevent the noise and surge induction, referring to the following.

1) Do not install a shielded twisted pair cable together with the main circuit, high-voltage cable, or load line and also do not bring them close to each other. (Keep a distance of 100mm (3.94 inches) or more between them.)

2) Provide as much distance as possible between the shielded twisted pair cables and the power supply of the module or I/O signal cables.

3) Do not use any of shielded twisted pair cables (e.g. One pair among three pairs) for supplying power.

(b) Connecting terminating resistors

For the network modules at both ends, connect the DA and DB by a terminating resister (110Ω, 1/2W) provided with the module.

(c) Connecting/disconnecting a shielded twisted pair cable

Shut off all phases of the external power supply for the system.

(2) Connection of cable

(a) Connection method

For connection between DAs and between DBs, use twisted pair cables.
No cabling is required for (DG).
In addition, connect terminating resistors for stations at both ends.

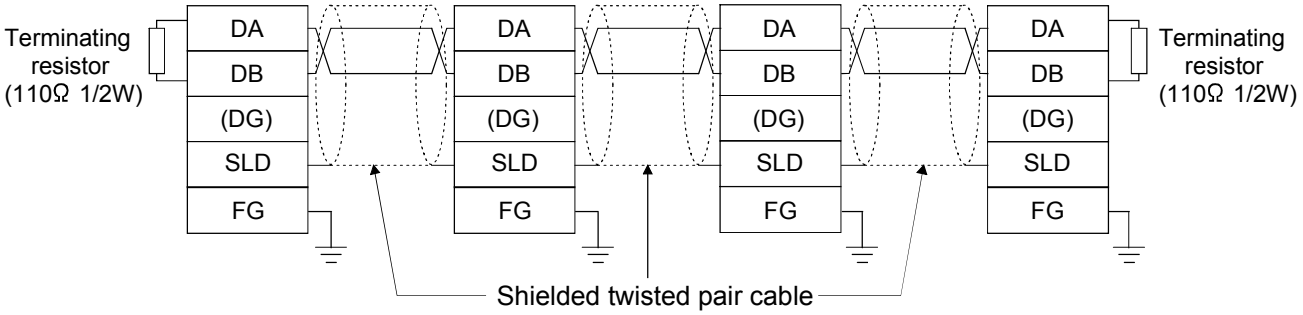

(b) Connecting a cable to the spring clamp terminal block

The following explains connecting method of a cable to a spring clamp terminal block.

For the stripping method of the cable end, refer to Section 5.3. in this manual.

Use a recommended screwdriver or equivalent for connecting or disconnecting cables.

For details of the driver, refer to Appendix.5 in the Q corresponding MELSECNET/H Network System Reference Manual (PLC to PLC network).

1) Connecting the cable

Fully insert the cable into the correct opening with the open/close button pressed by a slotted screwdriver.

When using a bar terminal, the cable can be inserted without pressing the button.

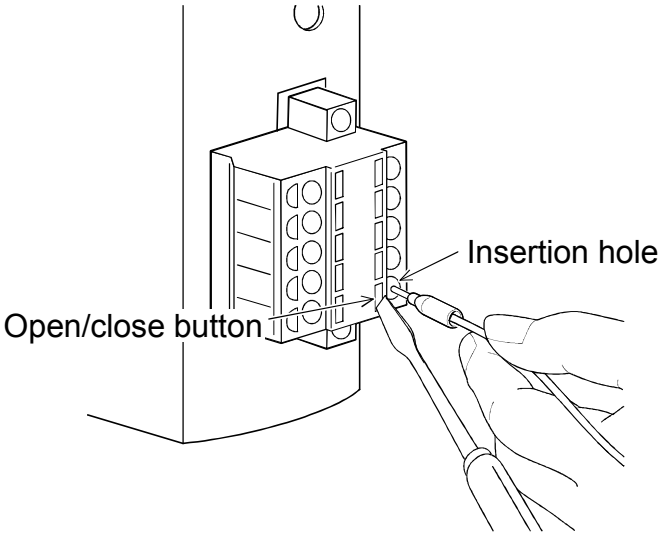

2) Disconnecting the cable

Keep pressing the open/close button by a slotted screwdriver until the cable is completely pulled out.

5.2 Twisted Bus System (When using Version 1.10 compatible CC-Link dedicated cable)

5.2.1 Specifications of Version 1.10 compatible CC-Link dedicated cable

The following table shows the specifications of the Version 1.10 compatible CC-Link dedicated cable used for the twisted bus system.

The following Version 1.10 compatible CC-Link dedicated cable can be used.

Product name	Model	Manufacturer
Version 1.10 compatible CC-Link dedicated cable	FANC-110SBH	Mitsubishi Electric System & Service Co., Ltd.
	FA-CBL200PSBH	Mitsubishi Electric Engineering Co., Ltd.

5.2.2 Precautions for wiring Version 1.10 compatible CC-Link dedicated cable

(1) Precautions for wiring

(a) Usage of CC-Link cables

The Version 1.10 compatible CC-Link cable cannot be used together with other CC-Link cables (CC-Link dedicated cable and CC-Link dedicated high-performance cable)

When used together, normal data communication cannot be expected.

(b) Branching of CC-Link cable

Connect network modules only with CC-Link cables.

Repeater hubs and connectors cannot be used.

(c) Grounding of CC-Link cable

Ground both ends of the shielded wire of the Version 1.10 compatible CC-Link dedicated cable to the protective ground conductor by connecting to "SLD" of each network module via "FG".

The SLD and FG are connected within the module.

(d) Connecting a terminating resistor

For the network module at both ends, connect the DA and DB by a terminating resister (110Ω, 1/2W) provided with the module.

(e) Connecting/disconnecting Version 1.10 compatible CC-Link dedicated cable

Shut off all phases of the external power supply for the system.

(2) Connection of cable

(a) Connection method

Connect a blue, white, and yellow cable to the DA, DB, and (DG) respectively.

In addition, use terminating resistors for the stations at both ends.

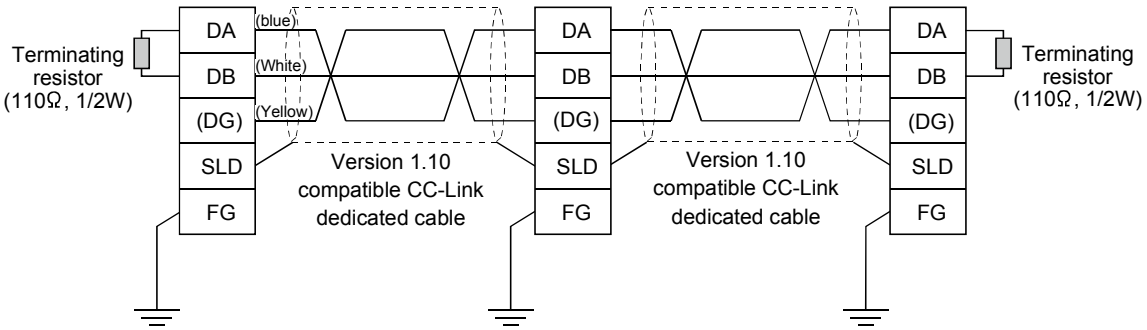

(b) Wiring to spring clamp terminal block

For the wiring method of a cable to a spring clamp terminal block, refer to Section 5.1.2 (2)(b) in this manual.

5.3 Connecting Twisted Pair Cable, and Bar Terminal for the Version 1.10 Compatible CC-Link Dedicated Cable

This section explains connecting method of bar terminal and cable.

(1) Applicable solderless terminals (bar terminals) and crimping tools

Product name	Model	Manufacturer	Remarks
Bar-type solderless terminal	FA-VTC125T9	For inquiries and orders, please contact your local Mitsubishi Electric Engineering Co., Ltd representative.	0.3 to 1.65mm^2
Tool for bar-type solderless terminal	FA-NH65A		-
Bar-type solderless terminal	TE0.5-10	For inquiries and orders, please contact your local NICHIFU TERMINAL MFG. Co., Ltd representative.	0.3 to 0.5mm^2
Tool for bar-type solderless terminal	NH-79		-
Bar-type solderless terminal	AI0.5-10WH	For inquiries and orders, please contact your local Phoenix Contact representative.	0.5mm^2
Tool for bar-type solderless terminal	CRIMPFOX UD6		-
	CRIMPFOX UD6-4		*1
	CRIMPFOX UD6-6		*1
	CRIMPFOX ZA3		-

*1: If a shielded or FG wire is crimped to a bar terminal using the CRIMPFOX UD6-4 or CRIMPFOX UD6-6, the wire may not be connected to the terminal block depending on the condition of cross section of the bar terminal after crimping.

(2) Stripping the cable end

Use an appropriate tool to crimp the bar terminal. (Refer to (1) in this section)

For details of the crimping method, refer to the manuals of the bar terminal or crimping tool used.

In the example, a crimping tool "FA-VTC125T9" manufactured by Mitsubishi Electric Corporation is used.

1) Strip the cable jacket by 5.5mm to 6.5mm.
2) Place the terminal in the correct place (in the end) of the locater.
3) Insert the terminal until it reaches to the locater.
4) Insert the stripped cable into the terminal and crimp it.

6. EXTERNAL DIMENSIONS

QJ71NT11B

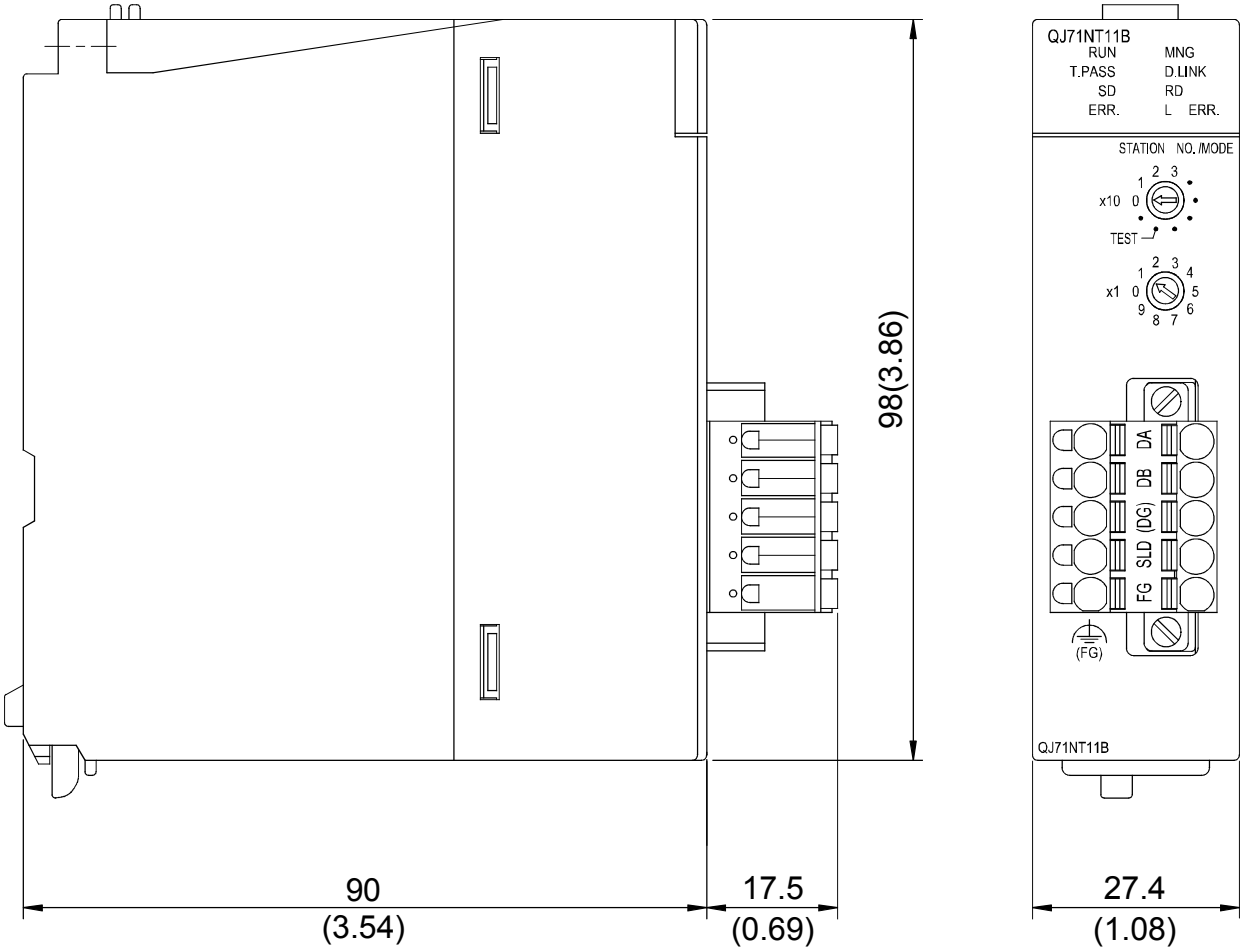

Unit: mm (in.)

Warranty

Mitsubishi will not be held liable for damage caused by factors found not to be the cause of Mitsubishi; machine damage or lost profits caused by faults in the Mitsubishi products; damage, secondary damage, accident compensation caused by special factors unpredictable by Mitsubishi; damages to products other than Mitsubishi products; and to other duties.

⚠**For safe use**

- This product has been manufactured as a general-purpose part for general industries, and has not been designed or manufactured to be incorporated in a device or system used in purposes related to human life.
- Before using the product for special purposes such as nuclear power, electric power, aerospace, medicine or passenger movement vehicles, consult with Mitsubishi.
- This product has been manufactured under strict quality control. However, when installing the product where major accidents or losses could occur if the product fails, install appropriate backup or failsafe functions in the system.

Country/Region	Sales office/Tel
U.S.A	Mitsubishi Electric Automation Inc. 500 Corporate Woods Parkway Vernon Hills, IL 60061, U.S.A. Tel : +1-847-478-2100
Brazil	MELCO-TEC Rep. Com.e Assessoria Tecnica Ltda. Rua Correia Dias, 184, Edificio Paraiso Trade Center-8 andar Paraiso, Sao Paulo, SP Brazil Tel : +55-11-5908-8331
Germany	Mitsubishi Electric Europe B.V. German Branch Gothaer Strasse 8 D-40880 Ratingen, GERMANY Tel : +49-2102-486-0
U.K	Mitsubishi Electric Europe B.V. UK Branch Travellers Lane, Hatfield, Hertfordshire., AL10 8XB, U.K. Tel : +44-1707-276100
Italy	Mitsubishi Electric Europe B.V. Italian Branch Centro Dir. Colleoni, Pal. Perseo-Ingr.2 Via Paracelso 12, I-20041 Agrate Brianza., Milano, Italy Tel : +39-039-60531
Spain	Mitsubishi Electric Europe B.V. Spanish Branch Carretera de Rubi 76-80, E-08190 Sant Cugat del Valles, Barcelona, Spain Tel : +34-93-565-3131
France	Mitsubishi Electric Europe B.V. French Branch 25, Boulevard des Bouvets, F-92741 Nanterre Cedex, France TEL: +33-1-5568-5568
South Africa	Circuit Breaker Industries Ltd. Private Bag 2016, ZA-1600 Isando, South Africa Tel : +27-11-928-2000

Country/Region	Sales office/Tel
Hong Kong	Mitsubishi Electric Automation (Hong Kong) Ltd. 10th Floor, Manulife Tower, 169 Electric Road, North Point, Hong Kong Tel : +852-2887-8870
China	Mitsubishi Electric Automation (Shanghai) Ltd. 4/F Zhi Fu Plazz, No.80 Xin Chang Road, Shanghai 200003, China Tel : +86-21-6120-0808
Taiwan	Setsuyo Enterprise Co., Ltd. 6F No.105 Wu-Kung 3rd.Rd, Wu-Ku Hsiang, Taipei Hsine, Taiwan Tel : +886-2-2299-2499
Korea	Mitsubishi Electric Automation Korea Co., Ltd. 1480-6, Gayang-dong, Gangseo-ku Seoul 157-200, Korea Tel : +82-2-3660-9552
Singapore	Mitsubishi Electric Asia Pte, Ltd. 307 Alexandra Road #05-01/02, Mitsubishi Electric Building, Singapore 159943 Tel : +65-6470-2460
Thailand	Mitsubishi Electric Automation (Thailand) Co., Ltd. Bang-Chan Industrial Estate No.111 Moo 4, Serithai Rd, T.Kannayao, A.Kannayao, Bangkok 10230 Thailand Tel : +66-2-517-1326
Indonesia	P.T. Autoteknindo Sumber Makmur Muara Karang Selatan, Block A/Utara No.1 Kav. No.11 Kawasan Industri Pergudangan Jakarta - Utara 14440, P.O.Box 5045 Jakarta, 11050 Indonesia Tel : +62-21-6630833
India	Messung Systems Pvt, Ltd. Electronic Sadan NO:III Unit No15, M.I.D.C Bhosari, Pune-411026, India Tel : +91-20-2712-3130
Australia	Mitsubishi Electric Australia Pty. Ltd. 348 Victoria Road, Rydalmere, N.S.W 2116, Australia Tel : +61-2-9684-7777

MITSUBISHI ELECTRIC CORPORATION

HEAD OFFICE : TOKYO BUILDING, 2-7-3 MARUNOUCHI, CHIYODA-KU, TOKYO 100-8310, JAPAN
NAGOYA WORKS : 1-14, YADA-MINAMI 5-CHOME, HIGASHI-KU, NAGOYA, JAPAN

When exported from Japan, this manual does not require application to the Ministry of Economy, Trade and Industry for service transaction permission.

Specifications subject to change without notice.