Sanitary Check Valves

卫生级止回阀系列

卫生级止回阀
Sanitary Check Valve

应 用：

该类型止回阀用于不锈钢管道系统内，以达到防止流体回流的目的。

Application:

This type of check valves are used to stainless steel pipe system, in order to prevent the fluid flowing back.

工作原理：

止回阀是指依靠介质本身流动而自动开、闭阀瓣的一类阀门，当阀杆下部的压力超过阀杆上面的压力以及弹簧力时，止回阀阀瓣就会开启；当阀杆上下压力平衡时，止回阀就会关闭，从而达到介质在管道的单向流动，阻止液体的倒流，防止事故发生。

Work Principle:

Check valve is a type of valve which open or close the valve disc rely on the medium flow itself. The check valve disc will open when the pressure of stem bottom exceed the stem above and the spring.The check valve disc will close when the two pressure are equalled. So that the flow goes one way in the pipeline,and prevent the fluid flowing back ,avoid the accidents.

材 料：

钢制部件：不锈钢 304、不锈钢 316L。
密封圈： 硅橡胶（VMQ） 氟橡胶（FPM）三元乙丙（EPDM）

Material:

steel parts: 304 stainless steel, stainless steel 316L.
Seal: silicone rubber Material (VMQ) fluoroelastomer (FPM) ,EPDM)

技术数据

若止回阀被安装在一根垂直的管道内，开启阀门所需的压力大约为 6Kpa，最大输送物料压力为 1000Kpa，使用温度范围为 -10℃ - 140℃。

Technical Data:

If the check valves are installed in a vertical pipe, it nedd approximately equal pressure 6Kpa to open. Maximum pressure for conveying material is 1000Kpa,.Using temperature scope for - 10 ℃ - 140 ℃ .

标准设计

有各种标准的止回阀系列可向客户提供，即用于 DIN 标准系列，3A 标准系列，SMS 标准系列，ISO/IDF 标准系列，BS/RJT 标准系列，ASME /BPE 等标准系列。

止回阀的阀体分为两个部分，通过卡箍组装在一起，并用一种 特殊密封圈进行密封。一个导向圆片和四个导向杆用来引导弹簧，并配有 O 型密封圈的阀芯。 该类止回阀系列具有焊接式，卡箍式与外螺纹式连接端口，可适配各种管道连接。

Standard Design:

Various standards of valves can be provided to clients: DIN,3A,SMS,ISO/IDF,BS/RJT,ASME/BPE etc.

The body of Check valve is divided into two parts, they are together by the clamp,and also use a special gasket for seal.A guide discs and four guide bar are used to guide the spring, which is equipped with spindle with O type seal. This type of check valve:weld, clamp, and male.which are suitable for all kinds of pipeline connections.

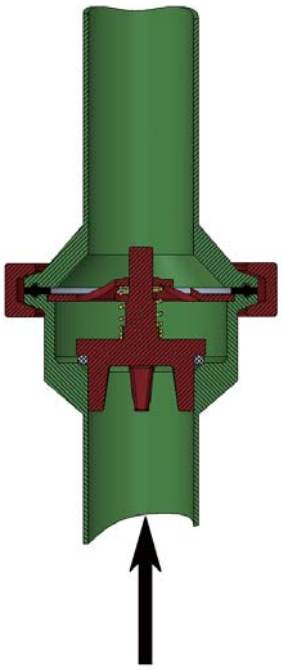

垂直放置显示了最佳内置情况。另外也可水平放置。四个阀锥腿确保了良好的指导线路。

90° rotation.
Shows the optimal built-in situation. Other positions permitted are e.g. horizontal. The four guide legs of the valve cone ensures good alignment.

卫生级止回阀
Sanitary Check Valve

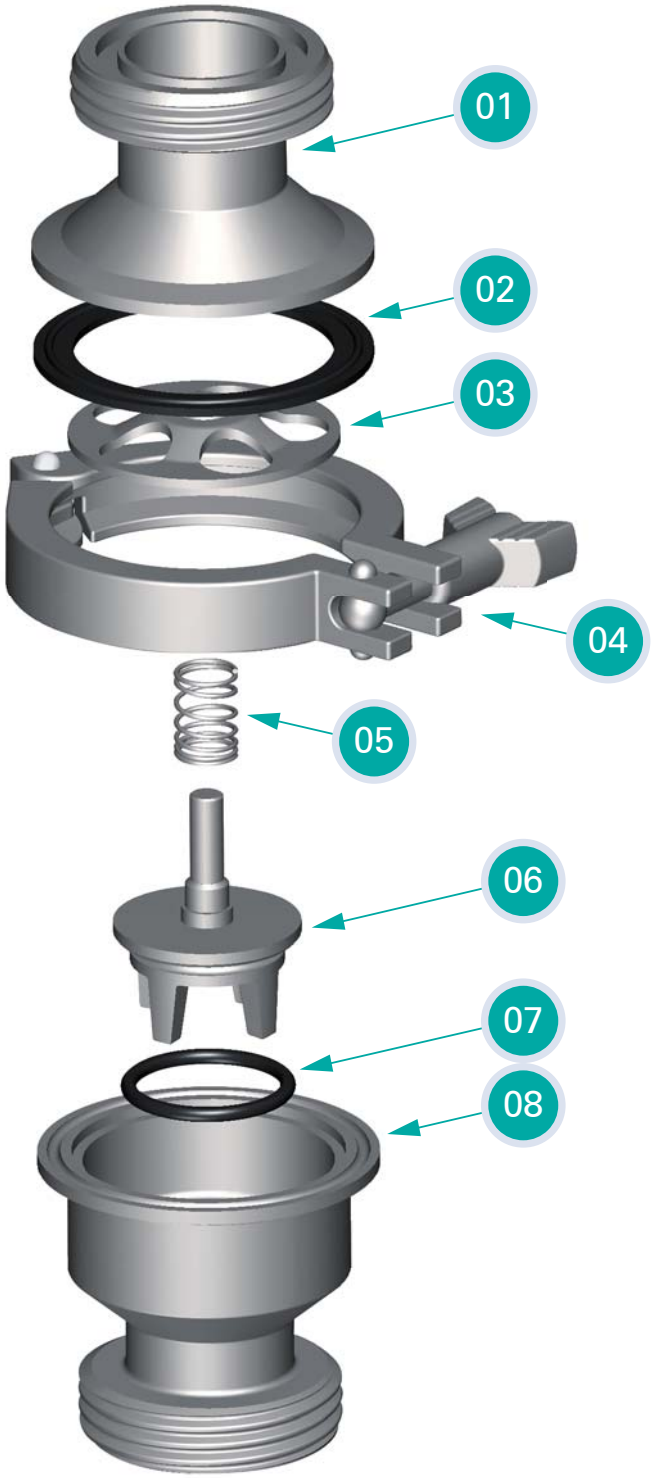

Parts List

No.	Description
01	阀盖 Valve Cap
02	密封圈 Gasket
03	花盘 Discchuck
04	卡箍 Clamp
05	弹簧 Spring
06	阀芯 Valve Core
07	O型圈 O-type Gaskot
08	阀体 valve Body

处理能力/压力降对比图 Pressure Drop/Capacity Diagram

注意!
这些曲线图示数据的测定系基于:
介质:
水(水温20℃)
测量:
符合VDI 2173.

Note!
For the diagram the following applies:
Medium: Water (20°C).
Measurement: In accordance with VDI 2173.

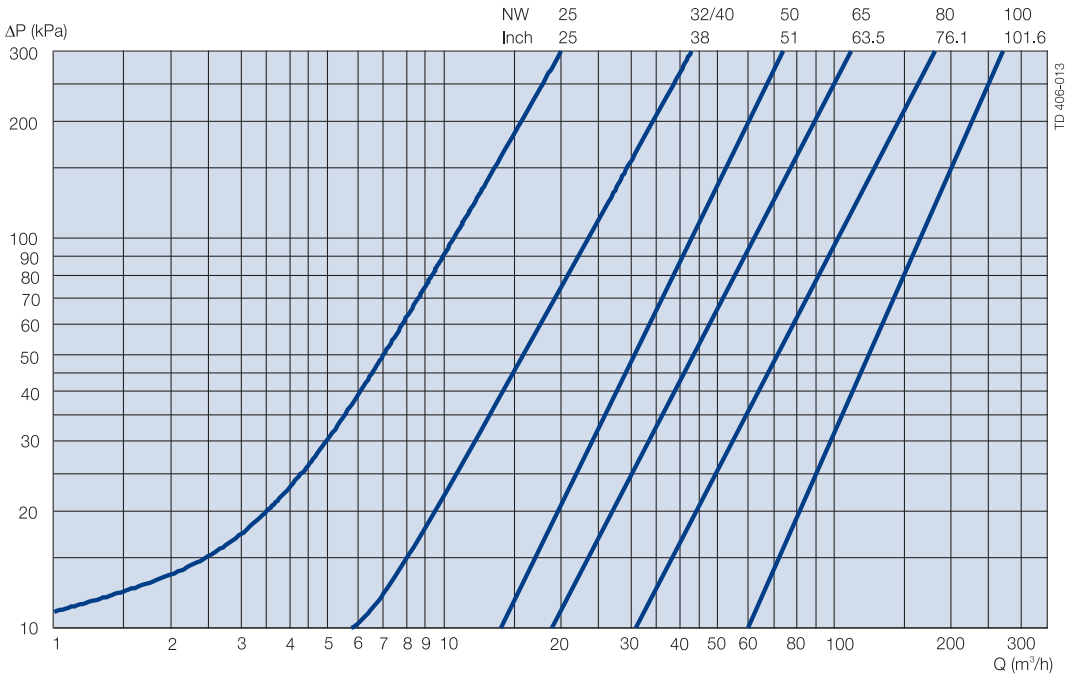

技术参数 Technical Data

金属材质 Materal	与产品接触的零部件 Contact with the product components	304L / 316L (1.4306 / 1.4404) 锻造 304L / 316L (1.4306 / 1.4404) Forging	可提供材质检测报告单 Can provide material inspection report
	不与产品接触的零部件 Materal No contact with the product components	304 / 202 (1.4301 / 202)	
密封材质 Sealing material	标配 Standard	硅橡胶 VMQ	采用进口密封材料，所有密封材质均符合 FDA 117.2600 Adopt import sealing materials, with all the seal material The FDA 117.2600
	选配 Option	三元乙丙 EPDM / 氟橡胶 (FPM)	
压力 Pressure	工作压力 Pressure of work	0~10bar	
温度 Temperature	工作温度 Working temperature	VMQ:(−50 ~ +180℃) EPDM :(−20 ~ +135℃) FPM:(−30 ~ +230℃)	
	灭菌温度 Sterilization temperature	150℃ (MAX 20min)	
表面处理 Surface treatment	内表面处理 Inside surface treatment	Ra ≥ 0.4−0.8 μ m	
	外表面处理 Surface treatment	Ra ≥ 0.8−1.6 μ m	
连接方式 Connection	焊接端管径 The diameter welding	焊接口：DIN 11850 − 2 与 11850−1 / SMS / 3A / ISO 等系列 Welding mouth: DIN 11850−2 with 11850−1 / SMS / 3A / ISO Series etc	
	连接方式：焊接、快装、外螺纹、内螺纹、法兰等 Connection mode: welding, clamp, male and female, flange, etc		
止回阀的体积流量 : 单位时间内流过止回阀某横截面积的流体体积 Check valve's volume flow: flow through the valve per unit time of a cross−sectional area of the fluid volume	体积流量 : 立方米 / 小时 (m³/h) 详细技术数据请参阅 (上图表) Volume flow: cubic meters / hour (m^3 / h) detailed technical data, refer to (on the chart)		

DIN 卫生级止回阀系列
Sanitary Check Valves

No.SZ11001

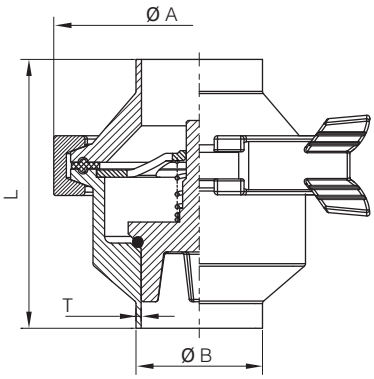

焊接式止回阀
Welded Check Valve

Size	A	B	L	T
DN15	62.5	18	81	1.5
DN20	62.5	22	81	1.5
DN25	77.5	28	81	1.5
DN32	77.5	34	81	1.5
DN40	89.0	40	81	1.5
DN50	105.0	52	91	1.5
DN65	134.0	70	95	2.0
DN80	145.0	85	101	2.0
DN100	158.5	104	110	2.0

No.SZ12002

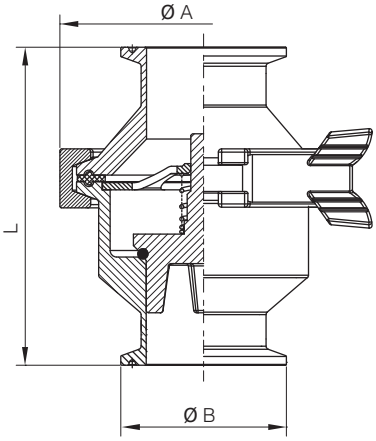

卡箍式止回阀
Clamped Check Valve

Size	A	B	L
DN15	62.5	34.0	95
DN20	62.5	34.0	95
DN25	77.5	50.5	95
DN32	77.5	50.5	95
DN40	89.0	50.5	95
DN50	105.0	64.0	104
DN65	134.0	91.0	110
DN80	145.0	106.0	120
DN100	158.5	119.0	130

No.SZ13003

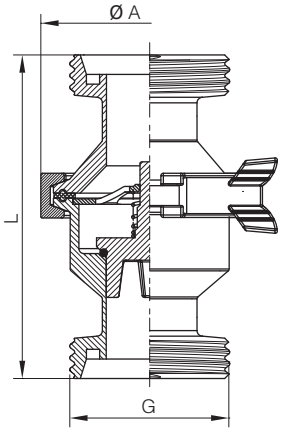

螺纹式止回阀
Threaded Check Valve

Size	A	G	L
DN15	62.5	RD34X1/8	109.0
DN20	62.5	RD44X1/6	115.0
DN25	77.5	RD52X1/6	122.0
DN32	77.5	RD58X1/6	122.0
DN40	89.0	RD65X1/6	124.5
DN50	105.0	RD78X1/6	130.0
DN65	134.0	RD95X1/6	145.0
DN80	145.0	RD110X1/4	161.0
DN100	158.5	RD130X1/4	161.0

3A 卫生级止回阀系列
Sanitary Check Valve

No.SZ21004

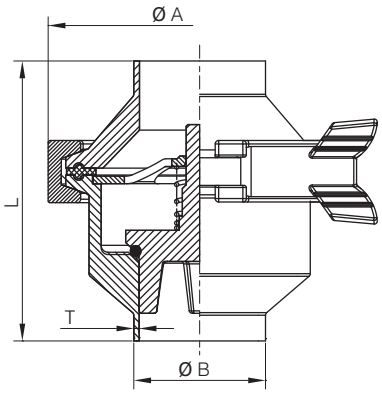

焊式止回阀
Welded Check Valve

Size	A	B	L	T
1/2"	62.5	12.7	81	1.65
3/4"	62.5	19.05	81	1.65
1"	77.5	25.4	81	1.65
1 1/2"	89.0	38.1	81	1.65
2"	105.0	50.8	91	1.65
2 1/2"	118.5	63.5	95	1.65
3"	134.0	76.2	101	1.65
4"	158.5	101.6	110	2.1

No.SZ22005

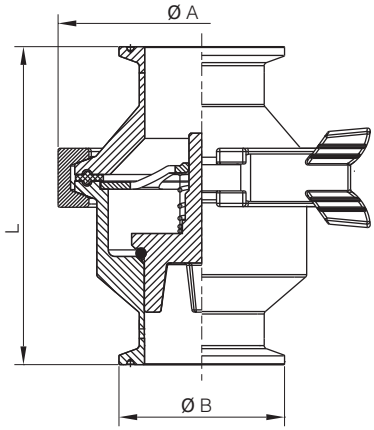

卡箍式止回阀
Clamped Check Valve

Size	A	B	L	
1/2"	62.5	25.4	95	
3/4"	62.5	25.4	95	
1"	77.5	50.5	95	
1 1/2"	89.0	50.5	95	
2"	105.0	64.0	104	
2 1/2"	118.5	77.5	110	
3"	134.0	91.0	115	
4"	158.5	119.0	130	

No.SZ23006

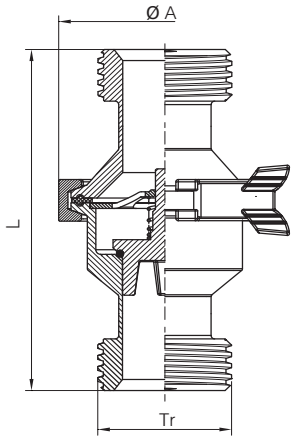

螺纹式止回阀
Threaded Check Valve

Size	A	Tr	L	
1"	77.5	37.13X1/8 TACME	114.6	
1 1/2"	89.0	50.65X1/8 TACME	117.1	
2"	105.0	64.17X1/8 TACME	124.2	
2 1/2"	118.5	77.67X1/8 TACME	141.4	
3"	134.0	91.19X1/8 TACME	151.2	
4"	158.5	119.25X1/6 TACME	157.4	

SMS 卫生级止回阀系列
Sanitary Check Valves

No.SZ31007

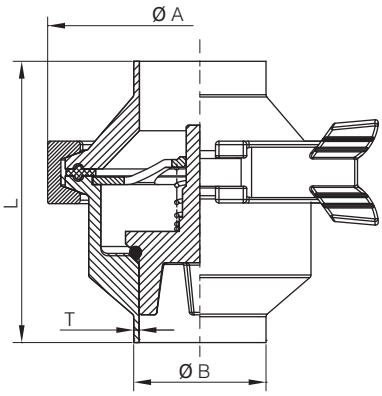

焊接式止回阀
Welded Check Valve

Size	A	B	L	T
25	77.5	25.4	81	1.5
32	77.5	31.8	81	1.5
38	89.0	38.1	81	1.5
51	105.0	50.8	91	1.5
63	118.5	63.5	95	2.0
76	134.0	76.2	101	2.0
102	158.5	101.6	110	2.0

No.SZ32008

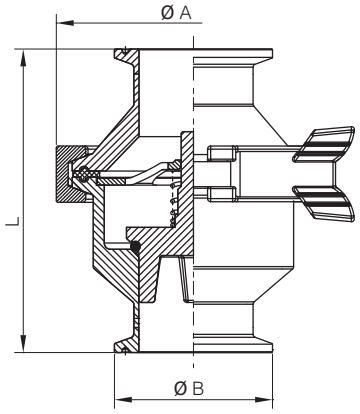

卡箍式止回阀
Clamped Check Valve

Size	A	B	L	
25	77.5	50.5	95	
32	77.5	50.5	95	
38	89.0	50.5	95	
51	105.0	64.0	105	
63	118.5	77.5	110	
76	134.0	91.0	115	
102	158.5	119.0	130	

No.SZ33009

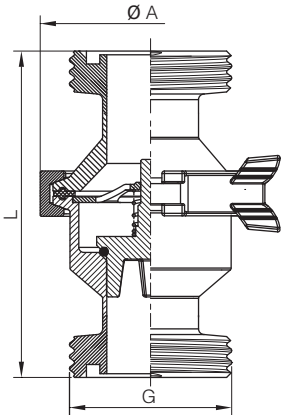

螺纹式止回阀
Threaded Check Valve

Size	A	G	L	
25	77.5	RD40X1/6	108.0	
32	77.5	RD48X1/6	110.0	
38	89.0	RD60X1/6	120.5	
51	105.0	RD70X1/6	126.0	
63	118.5	RD85X1/6	141.0	
76	134.0	RD98X1/6	151.0	
102	158.5	RD125X1/4	157.0	

ISO/IDF

卫生级止回阀系列
Sanitary Check Valve

No.SZ41010

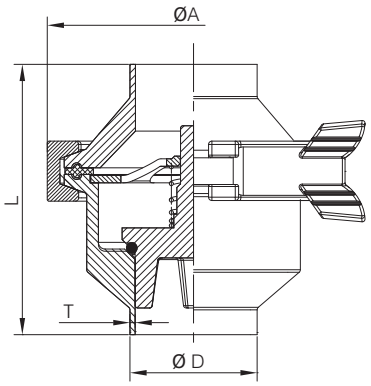

焊接式止回阀
Welded Check Valve

Size	A	D	L	T
Ø19	62.5	19.1	81	1.5
Ø25	77.5	25.4	81	1.5
Ø32	77.5	31.8	81	1.5
Ø38	89.0	38.1	81	1.5
Ø45	105.0	45.0	91	2.0
Ø51	105.0	50.8	91	1.5
Ø63	118.5	63.5	95	2.0
Ø76	134.0	76.2	101	2.0
Ø89	134.0	89.0	101	2.0
Ø102	158.5	101.6	110	2.0

No.SZ42011

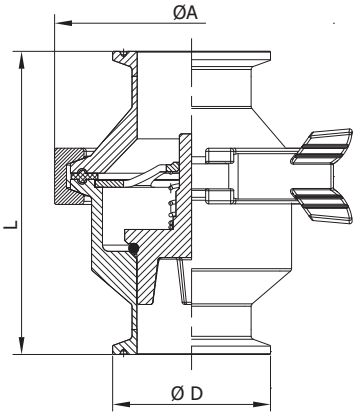

卡箍式止回阀
Clamped Check Valve

Size	A	D	L	
Ø25	77.5	50.5	95	
Ø38	89.0	50.5	95	
Ø51	105.0	64.0	105	
Ø63	118.5	77.5	110	
Ø76	134.0	91.0	115	
Ø102	158.5	119.0	130	

No.SZ43012

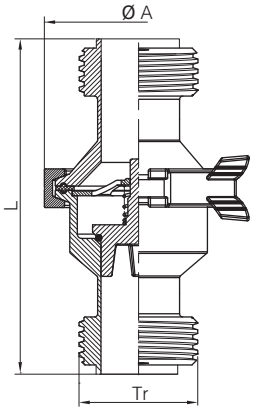

螺纹式止回阀
Threaded Check Valve

Size	A	Tr	L	
Ø25	77.5	37.1X1/8 TACME	121.0	
Ø38	89.0	50.6X1/8 TACME	123.5	
Ø51	105.0	64.1X1/8 TACME	129.0	
Ø63	118.5	77.6X1/8 TACME	140.0	
Ø76	134.0	91.1X1/8 TACME	148.0	
Ø102	158.5	118.2X1/8 TACME	148.0	

DS 卫生级止回阀系列
Sanitary Check Valves

No.SZ51013

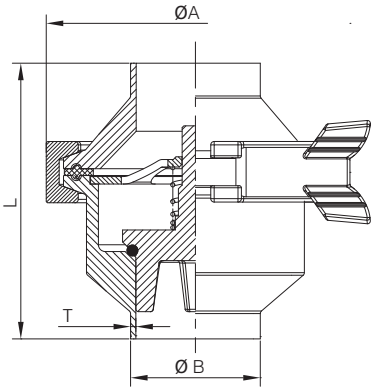

焊接式止回阀
Welded Check Valve

Size	A	B	L	T
1"	77.5	25.4	81	1.45
1 1/2"	89.0	38.4	81	1.45
2"	105.0	51.4	91	1.45
2 1/2"	118.5	63.9	95	1.7
3"	134.0	76.4	101	2.2
4"	158.5	102.0	110	2.2

No.SZ52014

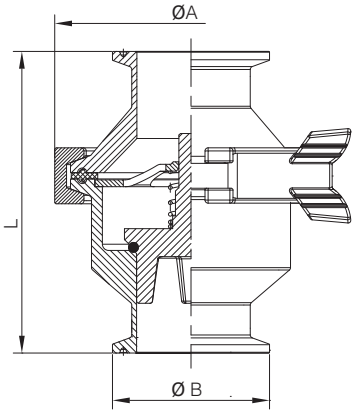

卡箍式止回阀
Clamped Check Valve

Size	A	B	L	
1"	77.5	50.5	95	
1 1/2"	89.0	50.5	95	
2"	105.0	64.0	104	
2 1/2"	118.5	77.5	110	
3"	134.0	91.0	120	
4"	158.5	119.0	130	

No.SZ53015

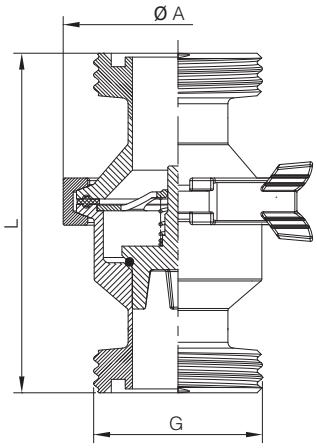

螺纹式止回阀
Threaded check valve

Size	A	G	L	
1"	77.5	RD44X1/6	115.0	
1 1/2"	89.0	RD58X1/6	120.5	
2"	105.0	RD72X1/6	126.0	
2 1/2"	118.5	RD88X1/6	145.0	
3"	134.0	RD100X1/6	153.0	
4"	158.5	RD130X1/6	153.0	

BS-RJT

卫生级止回阀系列
Sanitary Check Valve

No.SZ61016

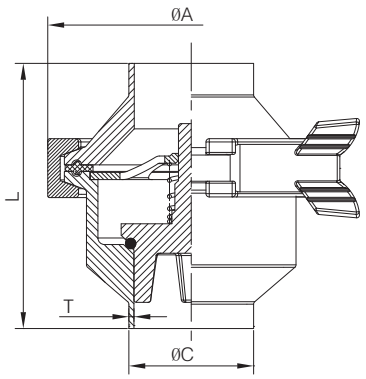

焊接式止回阀
Welded Check Valve

Size	A	C	L	T
1"	77.5	25.65	81	1.725
1 1/2"	89.0	38.35	81	1.725
2"	105.0	51.05	91	1.725
2 1/2"	118.5	63.75	95	1.725
3"	134.0	76.45	101	1.725
4"	158.5	101.85	110	2.125

No.SZ62017

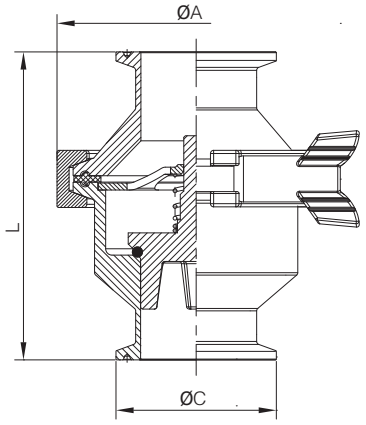

卡箍式止回阀
Clamped check valve

Size	A	C	L	
1''	77.5	50.5	95	
1 1/2''	89.0	50.5	95	
2''	105.0	64.0	104	
2 1/2''	118.5	77.5	110	
3''	134.0	91.0	120	
4''	158.5	119.0	130	

No.SZ63018

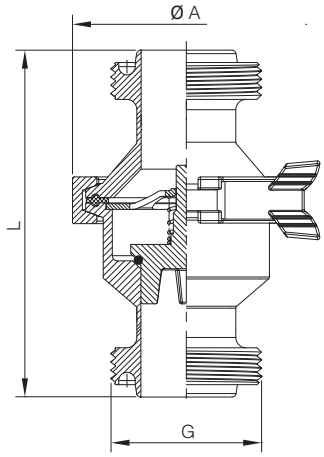

螺纹式止回阀
Threaded Check Valve

Size	A	G	L	
1''	77.5	45.7x1/8 TWHIT	130.6	
1 1/2	89.0	58.4x1/8 TWHIT	133.1	
2''	105.0	72.7x1/6 TWHIT	138.6	
2 1/2''	118.5	85.4x1/6 TWHIT	149.6	
3''	134.0	98.1x1/6 TWHIT	157.6	
4''	158.5	123.5x1/6 TWHIT	157.6	