Sanitary Ball Valve

卫生级球阀系列

卫生级蝶式球阀
Sanitary Butterfly Ball Valve

应 用：

该类型阀门系列是一款自动或手动操纵的蝶式球阀系列，因其能很好的处理粘性或含有颗粒物的介质，从而广泛应用于食品、饮料加工，以及制药和化学工业管道系统内调节、控制介质流量的一类阀门。

Application:

This type of valve is a kind of automatically or manually manipulation of butterfly type ball valve, because of its can be very good deal with viscous or medium with particulate, which is widely used in food, beverage, pharmaceutical and chemical industrial piping system,to regulate and control the medium flow in the system.

材 料：

钢制部件：不锈钢 304、不锈钢 316L。
密封圈：硅橡胶(VMQ) 氟橡胶(FPM) 三元乙丙 (EPDM) 聚四氟乙烯 (PTFE)

Material:

steel parts: 304 stainless steel, stainless steel 316L.
Seal: silicone rubber Material (VMQ) fluoroelastomer (FPM) EPDM (EPDM) Polytetrafluoroethylene (PTFE)

工作原理：

该类型阀门既可以通过一个电动执行器或一个气动执行器进行远程遥控操作，也可以通过一个手柄进行人为操控。

电动执行器或气动执行器是将一个活塞的轴向运动转换为阀门轴的 90°旋转，实现开启或关闭，实现对管道流体的控制和开 / 关任务。气动执行器装置有三种标准：常开(NO)型，常闭(NC) 型，气 / 气 (A/A) 型。

鸭嘴式手动操作用的多位手柄可通过 15°位置的调节将阀门机械式锁定在其开启或关闭的 12 位子上，达到控制介质流量的目的：

拉杆式手动操作用手柄通过 4 个多功能定位，将阀门机械式锁定在其开启或关闭的 4 个位子上，也达到控制介质流量的目的。

Work Principle

This kind of valve can be handle both by eletric or a pneumatic actuator also can operated by handle
Electric actuator or pneumatic actuator is to revolve the axial movement of piston to be 90° rotation of valve shaft. So that the valve can be open or close. In that case, the flow can be control and achieve the task of swtch. They have three type of actuator : normally open (NO) , normally closed (NC), air/ air (A/A).
Muti-position handle can use to 15°adjustment of valve 12 seat to lock open or close, In that way, the valve can control the flow.
Pulling handle can use to the 4 multi-function to lock open or close, In that way, the valve can control the flow.

标准设计

有各种标准的阀门系列可以向客户提供，即用于 DIN 标准系列，3A 标准系列，SMS 标准系列，ISO/IDF 标准系列，BS/RJT 标准系列，ASME/BPE 等标准系列。

该蝶式球阀基本组成部件包括：一个分为两半的阀体，带有贯通腔的球体，阀杆和控制装置（手柄 / 执行器）等。

SENMING 现有的蝶式球阀系列有：焊接式、卡箍式和一端焊接一端卡箍式等常用连接方式。

Standard Design:

Various standards of valves can be provided to clients: DIN,3A,SMS,ISO/IDF,BS/RJT,ASME/BPE etc.

The parts of valve usually include:valve body divided into two parts, transfixion cavity sphere,stem and control sets(handle/actuator)etc.

SENMING have the series as follows: weld,clamp,weld/clamp etc.

卫生级蝶式球阀
Sanitary Butterfly Ball Valve

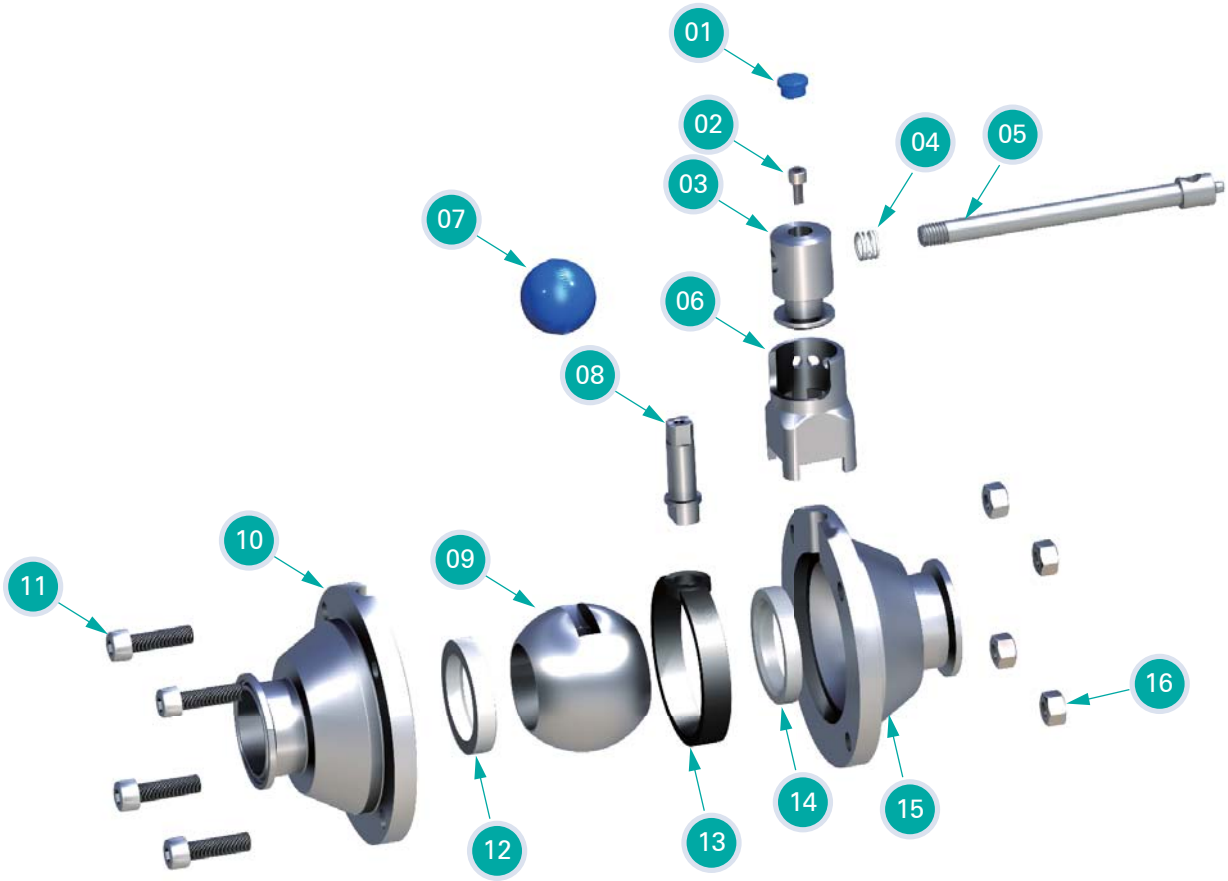

Parts List

No.	Description	No.	Description
01	塑料盖 Plastic Cap	09	球芯 Ball Core
02	螺钉 Screw	10	阀体 Valve Body
03	旋转头 Swivel Head	11	螺钉 Screw
04	弹簧 Spring	12	四氟垫 Four Fluorine Mat
05	拉杆 Pull Handle	13	密封圈 Gasket
06	外套 Coat	14	四氟垫 Four Fluorine Mat
07	手柄球 Pull Handle Ball	15	阀体 Valve Body
08	阀杆 Valve Rod	16	螺母 Nut

DIN 卫生级蝶式球阀
Sanitary Butterfly Ball Valve

No.SS12001

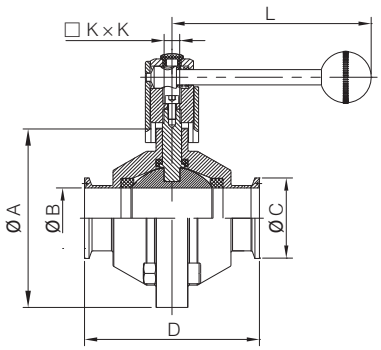

卡箍式蝶式球阀
Clamped Butterfy-type Ball Valve

Size	A	B	C	D	KxK	L
DN20	86.0	19.0	34.0	85	10X10	136.0
DN25	92.0	25.0	50.5	85	10X10	136.0
DN32	106.0	31.0	50.5	85	10X10	136.0
DN40	115.0	37.0	50.5	100	10X10	136.0
DN50	131.0	49.0	64.0	110	10X10	136.0
DN65	160.0	66.0	91.0	130	10X10	136.0
DN80	186.0	81.0	106.0	140	10X10	163.0
DN100	220.0	100.0	119.0	194	10X10	163.0

No.SS11002

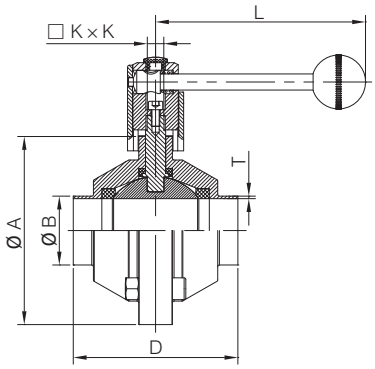

焊接式蝶式球阀
Welded Butterfy-type Ball Valve

Size	A	B	D	KxK	L	T
DN20	86.0	22.0	60.0	10X10	136.0	1.5
DN25	92.0	28.0	67.0	10X10	136.0	1.5
DN32	106.0	34.0	78.0	10X10	136.0	1.5
DN40	115.0	40.0	85.0	10X10	136.0	1.5
DN50	131.0	52.0	92.4	10X10	136.0	1.5
DN65	160.0	70.0	118.0	10X10	136.0	2.0
DN80	186.0	85.0	148.0	10X10	163.0	2.0
DN100	220.0	104.0	174.0	10X10	163.0	2.0

No.SS12003

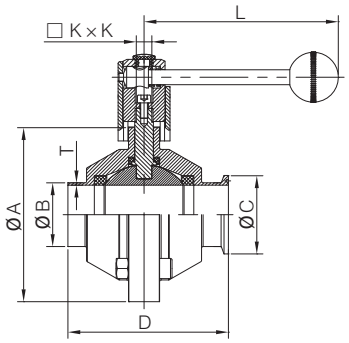

一端焊接一端快装式蝶式球阀
Welded / Clamped Butterfy-type Ball Valve

Size	A	B	C	D	KxK	L	T
DN20	86.0	22.0	34.0	70.0	10X10	136.0	1.5
DN25	92.0	28.0	50.5	77.0	10X10	136.0	1.5
DN32	106.0	34.0	50.5	88.0	10X10	136.0	1.5
DN40	115.0	40.0	50.5	95.0	10X10	136.0	1.5
DN50	131.0	52.0	64.0	102.4	10X10	136.0	1.5
DN65	160.0	70.0	91.0	128.0	10X10	136.0	2.0
DN80	186.0	85.0	106.0	158.0	10X10	163.0	2.0
DN100	220.0	104.0	119.0	184.0	10X10	163.0	2.0

3A 卫生级蝶式球阀
Sanitary Butterfly Ball Valve

No.SS22004

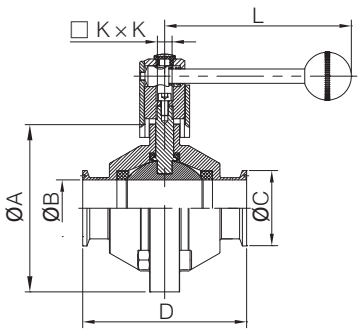

卡箍式蝶式球阀
Clamped Butterfy-type Ball Valve

Size	A	B	C	D	KxK	L
3/4''	86.0	15.75	25.4	85	10X10	136.0
1''	92.0	22.1	50.5	85	10X10	136.0
1 1/4''	106.0	28.5	50.5	85	10X10	136.0
1 1/2''	115.0	34.8	50.5	100	10X10	136.0
2''	131.0	47.5	64.0	110	10X10	136.0
2 1/2''	160.0	60.2	77.5	130	10X10	136.0
3''	186.0	72.9	91.0	140	10X10	163.0
4''	220.0	97.4	119.0	194	10X10	163.0

No.SS21005

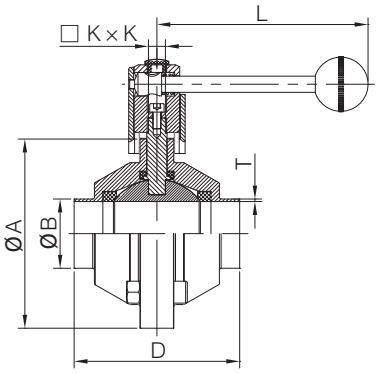

焊接式蝶式球阀
Welded Butterfy-type Ball Valve

Size	A	B	D	KxK	L	T
3/4''	86.0	19.05	60.0	10X10	136.0	1.65
1''	92.0	25.4	67.0	10X10	136.0	1.65
1 1/4''	106.0	31.8	78.0	10X10	136.0	1.65
1 1/2''	115.0	38.1	85.0	10X10	136.0	1.65
2''	131.0	50.8	92.4	10X10	136.0	1.65
2 1/2''	160.0	63.5	118.0	10X10	136.0	1.65
3''	186.0	76.2	148.0	10X10	163.0	1.65
4''	220.0	101.6	174.0	10X10	163.0	2.1

No.SS22006

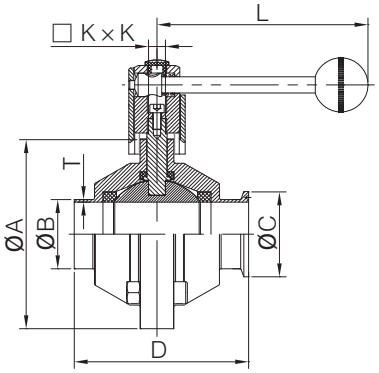

一端焊接一端快装式蝶式球阀
Welded / Clamped Butterfy-type Ball Valve

Size	A	B	C	D	KxK	L	T
3/4''	86.0	19.05	25.4	70.0	10X10	136.0	1.65
1''	92.0	25.4	50.5	77.0	10X10	136.0	1.65
1 1/4''	106.0	31.8	50.5	88.0	10X10	136.0	1.65
1 1/2''	115.0	38.1	50.5	95.0	10X10	136.0	1.65
2''	131.0	50.8	64.0	102.4	10X10	136.0	1.65
2 1/2''	160.0	63.5	77.5	128.0	10X10	136.0	1.65
3''	186.0	76.2	91.0	158.0	10X10	163.0	1.65
4''	220.0	101.6	119.0	184.0	10X10	163.0	2.1

SMS

卫生级蝶式球阀
Sanitary Butterfly Ball Valve

No.SS32007

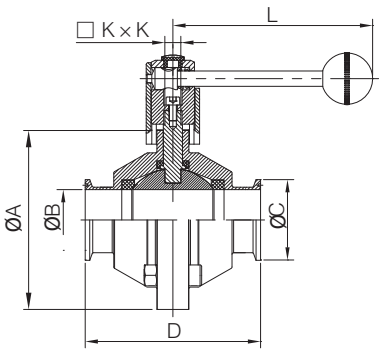

卡箍式蝶式球阀
Clamped Butterfy-type Ball Valve

Size	A	B	C	D	KxK	L
19	86.0	16.1	50.5	85	10X10	136.0
25	92.0	22.4	50.5	85	10X10	136.0
32	106.0	28.8	50.5	85	10X10	136.0
38	115.0	35.1	50.5	100	10X10	136.0
51	131.0	47.8	64.0	110	10X10	136.0
63	160.0	59.5	77.5	130	10X10	136.0
76	186.0	72.2	91.0	140	10X10	163.0
102	220.0	97.6	119.0	194	10X10	163.0

No.SS31008

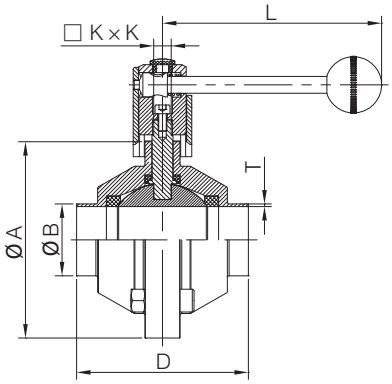

焊接式蝶式球阀
Welded Butterfy-type Ball Valve

Size	A	B	D	KxK	L	T
19	86.0	19.1	60.0	10X10	136.0	1.5
25	92.0	25.4	67.0	10X10	136.0	1.5
32	106.0	31.8	78.0	10X10	136.0	1.5
38	115.0	38.1	85.0	10X10	136.0	1.5
51	131.0	50.8	92.4	10X10	136.0	1.5
63	160.0	63.5	118.0	10X10	136.0	2.0
76	186.0	76.2	148.0	10X10	163.0	2.0
102	220.0	101.6	174.0	10X10	163.0	2.0

No.SS32009

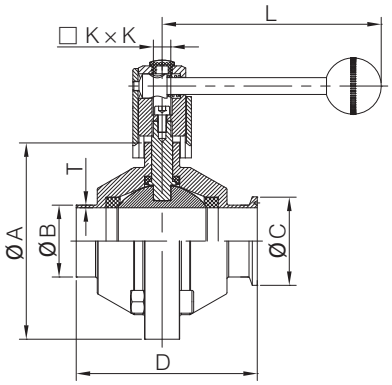

一端焊接一端快装式蝶式球阀
Welded / Clamped Butterfy-type Ball Valve

Size	A	B	C	D	KxK	L	T
19	86.0	19.1	50.5	70.0	10X10	136.0	1.5
25	92.0	25.4	50.5	77.0	10X10	136.0	1.5
32	106.0	31.8	50.5	88.0	10X10	136.0	1.5
38	115.0	38.1	50.5	95.0	10X10	136.0	1.5
51	131.0	50.8	64.0	102.4	10X10	136.0	1.5
63	160.0	63.5	77.5	128.0	10X10	136.0	2.0
76	186.0	76.2	91.0	158.0	10X10	163.0	2.0
102	220.0	101.6	119.0	184.0	10X10	163.0	2.0

ISO/IDF

卫生级蝶式球阀
Sanitary Butterfly Ball Valve

No.SS42010

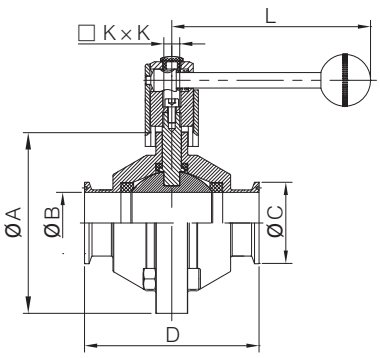

卡箍式蝶式球阀
Clamped Butterfy-type Ball Valve

Size	A	B	C	D	KxK	L
Ø19	86.0	16.1	25.4	85	10X10	136.0
Ø25	92.0	22.4	50.5	85	10X10	136.0
Ø32	106.0	28.8	50.5	85	10X10	136.0
Ø38	115.0	35.1	50.5	100	10X10	136.0
Ø51	131.0	47.8	64.0	110	10X10	136.0
Ø63	160.0	59.5	77.5	130	10X10	136.0
Ø76	186.0	72.2	91.0	140	10X10	163.0
Ø102	220.0	97.6	119.0	194	10X10	163.0

No.SS41011

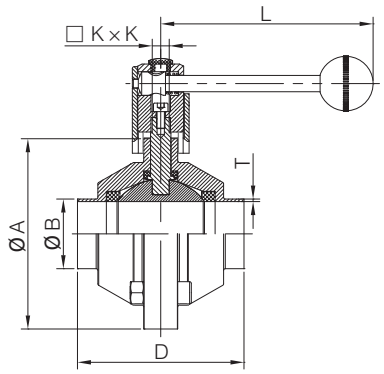

焊接式蝶式球阀
Welded Butterfy-type Ball Valve

Size	A	B	D	KxK	L	T
Ø19	86.0	19.1	60.0	10X10	136.0	1.5
Ø25	92.0	25.4	67.0	10X10	136.0	1.5
Ø32	106.0	31.8	78.0	10X10	136.0	1.5
Ø38	115.0	38.1	85.0	10X10	136.0	1.5
Ø51	131.0	50.8	92.4	10X10	136.0	1.5
Ø63	160.0	63.5	118.0	10X10	136.0	2.0
Ø76	186.0	76.2	148.0	10X10	163.0	2.0
Ø102	220.0	101.6	174.0	10X10	163.0	2.0

No.SS42012

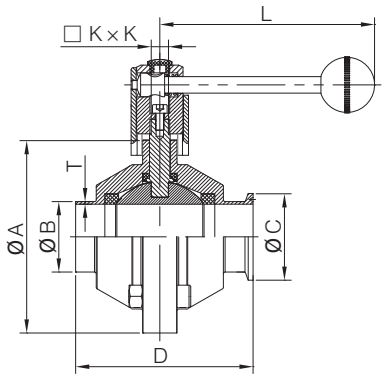

一端焊接一端快装式蝶式球阀
Welded / Clamped Butterfy-type Ball Valve

Size	A	B	C	D	KxK	L	T
Ø19	86.0	19.1	25.4	70.0	10X10	136.0	1.5
Ø25	92.0	25.4	50.5	77.0	10X10	136.0	1.5 1.5
Ø32	106.0	31.8	50.5	88.0	10X10	136.0	
Ø38	115.0	38.1	50.5	95.0	10X10	136.0	1.5
Ø51	131.0	50.8	64.0	102.4	10X10	136.0	1.5
Ø63	160.0	63.5	77.5	128.0	10X10	136.0	2.0
Ø76	186.0	76.2	91.0	158.0	10X10	163.0	2.0
Ø102	220.0	101.6	119.0	184.0	10X10	163.0	2.0

卫生级直通球阀
Sanitary straight ball valve

标准设计：

有各标准的阀门系列可以向客户提供，即用于 DIN 标准系列，3A 标准系列,SMS 标准系列，ISO/IDF 标准系列，BS/RJT 标准系列，ASME/BPE 等标准系列。

球阀的组成部件一般包括：一个手柄、一个带有贯通腔的球体、阀体、阀门轴芯以及轴密封圈。

森明现有的球阀系列规格有：焊接式球阀、卡箍式球阀、螺纹式球阀等系列球阀.

Standard Design:

Have different standard of valve series can supply for customer, they are the DIN standard series,3A standard series, SMS standard series, ISO/IDF standard series, BS/RJT standard series, ASME/BPE etc.

The constitute elements of ball valve always included: one handle,one ball body with transfixion cavity, valve body, valve central spindle and spindle shaft seal.

The specification of SENMING ball valve series are welded ball valve, clamped ball valve, threaded ball valve etc.

应 用：

该类型球阀系列是一款卫生型的用于物料传送控制的一类阀门系列。广泛应用于食品、饮料加工，以及制药和化学工业领域。

Application:

The type of ball valve series is a kind of valve series a which use to transfer controlling the material, it extensively use to food, beverage processing and pharmacy, chemical industry area.

工作原理：

通过 90°旋转手柄，从而 90°带动有贯通腔的精确制造的球体，以开启或关闭阀门，达到控制介质流量。

Working Principle:

Through 90 degree rotary handle, drive the ball body which have transfixion cavity and precise manufacture, to open or close the valve, reach control the flow rate of medium.

材 料：

钢制部件：不锈钢 304、不锈钢 316L.
密封件：四氟垫、O 型密封圈

Material:

Steel parts:stainless steel 304,stainless steel 316L.
Seal:PTFE,O type seal ring

卫生级直通球阀
Sanitary Straight Ball Valve

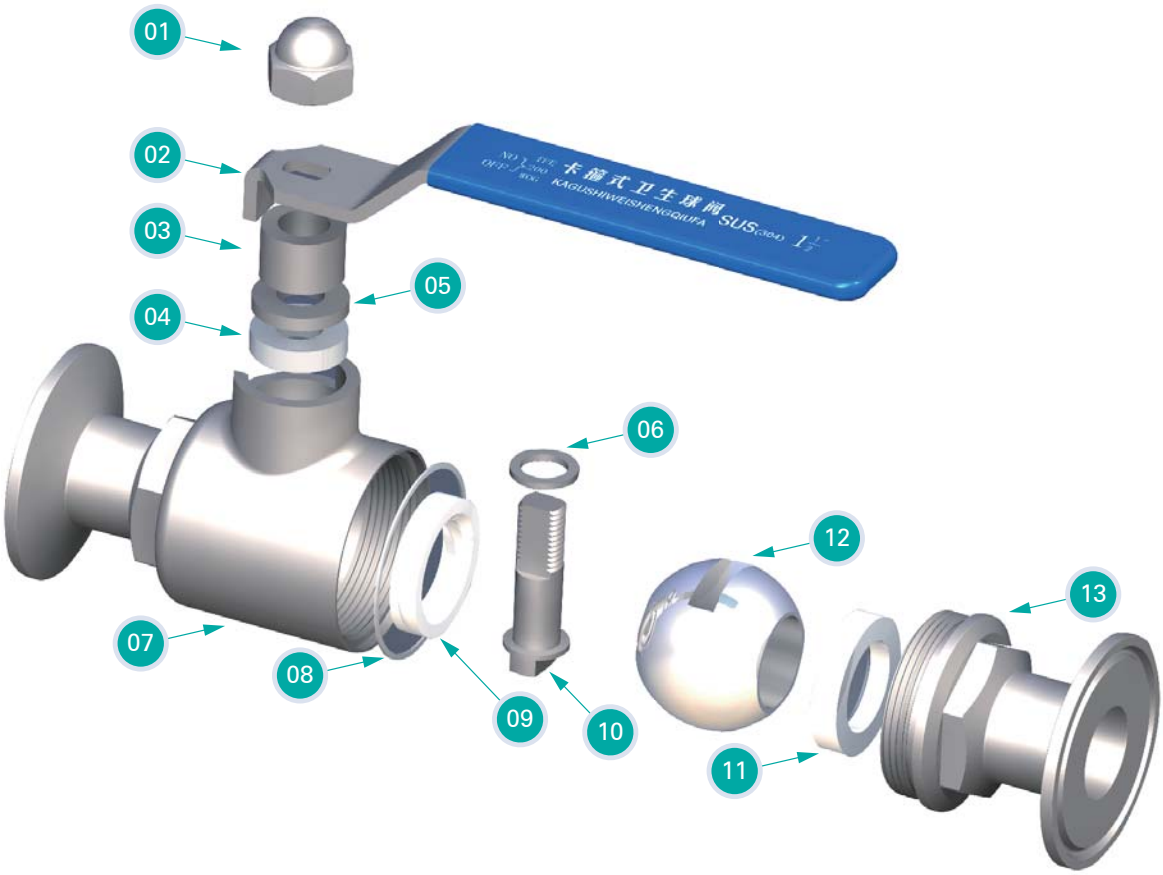

Parts List

No.	Description	No.	Description
01	盖形螺母 Cap Nut	09	四氟垫 Four Fluorine Mat
02	手柄 Pull Handle	10	阀杆 Valve Rod
03	衬套 Coat	11	四氟垫 Four Fluorine Mat
04	垫片 Gasket	12	球芯 Ball Core
05	密封垫 Seal Ring	13	阀盖 Valve Cap
06	平垫 Flat Gasket		
07	阀体 Valve Body		
08	四氟平垫 Four Fluorine Flat Mat		

卫生级三通球阀
Sanitary Three-Way Ball Valve

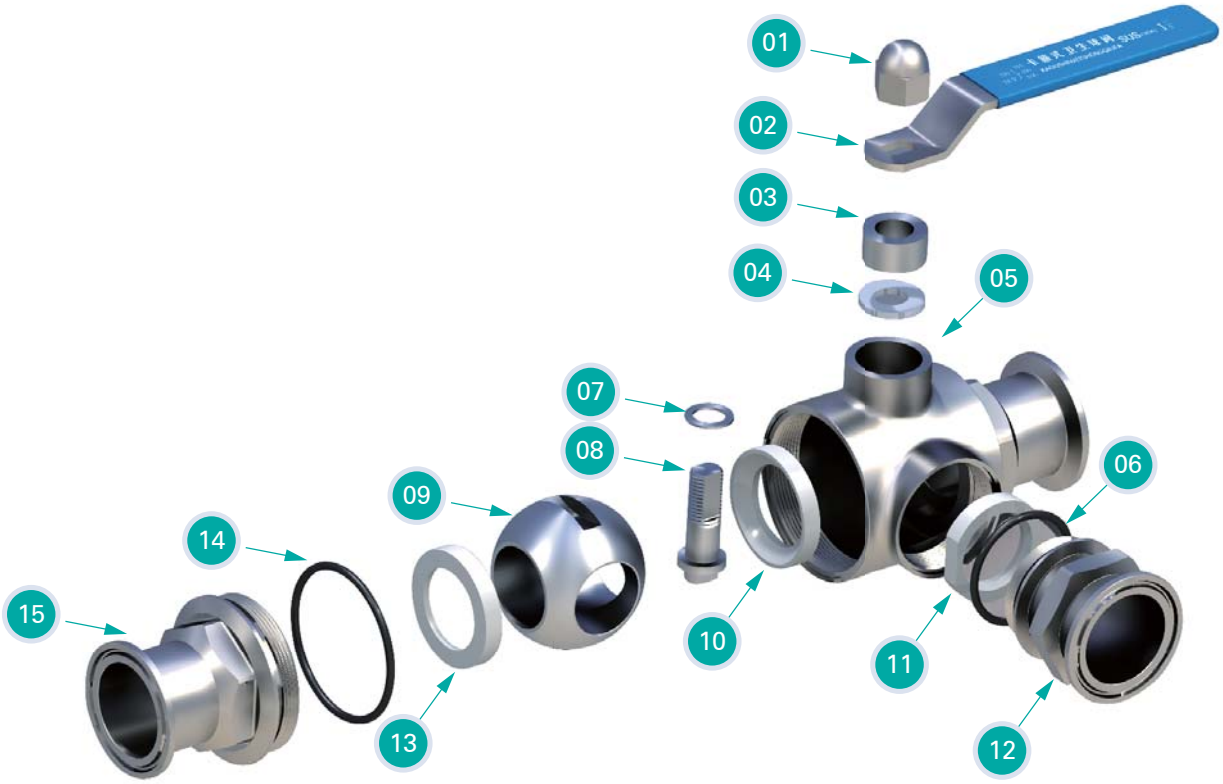

Parts List

No.	Description	No.	Description
01	盖形螺母 Cap Nut	09	球芯 Ball Core
02	手柄 Pull Handle	10	四氟垫 Four Fluorine Mat
03	衬套 Coat	11	四氟垫 Four Fluorine Mat
04	密封垫 Gasket	12	阀盖 Valve Cap
05	阀体 Valve Body	13	四氟垫 Four Fluorine Mat
06	O型圈 O-type Gasket	14	O型圈 O-type Gasket
07	平垫 Flat Gasket	15	阀盖 Valve Cap
08	阀杆 Valve Rod		

卫生级直通球阀
Sanitary Straight Ball Valve

技术参数 Technical Data

金属材质 Materal	与产品接触的零部件 Contact with the product components	304L / 316L (1.4306 / 1.4404) 锻造 304L / 316L (1.4306 / 1.4404) Forging	可提供材质检测报告单 Can provide material inspection report
	不与产品接触的零部件 Materal No contact with the product components	304 / 202 (1.4301 / 202)	
密封材质 Sealing material	标配 Standard	聚四氟乙烯 PTFE	采用进口密封材料，所有密封材质均符合 FDA 117.2600 Adopt import sealing materials, with all the seal material The FDA 117.2600
	选配 Option	三元乙丙 EPDM / 硅橡胶 VMQ	
压力 Pressure	工作压力 Working pressure	0~16bar	
	控制气源压力 Control air pressure	5~8bar	
温度 Temperature	连续工作温度 Continual working temperature	VMQ:(−50 ~ +180° C) EPDM :(−20 ~ +135° C) PTFE:(−25 ~ +250° C)	
	灭菌温度 Sterilization temperature	150℃ (Max 20min)	
表面处理 Surface treatment	内表面处理 Inside surface treatment	Ra ≥ 0.4−0.8 μ m	
	外表面处理 Surface treatment	Ra ≥ 0.8−1.6 μ m	
连接方式 Connection	焊接端管径 The diameter welding	焊接口：DIN 11850 – 2 与 11850−1 / SMS / 3A / ISO 等系列 Welding mouth: DIN 11850−2 with 11850−1 / SMS / 3A / ISO Series etc	
	连接方式：焊接、快装、外螺纹、内螺纹、法兰等 Connection mode: welding, fast loading, male and female, flange, etc		
气动控制 Pneumatic control	气动头及固定支架 Pneumatic head and fixed bracket		

DIN

卫生级直通球阀
Sanitary Straight Ball Valve

No.SQ12013

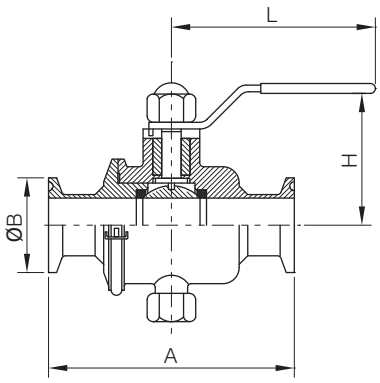

卡箍轻便式球阀
Clamped Portable Ball Valve

Size	A	B	H	L	
DN15	95.0	50.5	60.0	125.0	
DN20	95.0	50.5	60.0	125.0	
DN25	120.0	50.5	60.0	125.0	
DN32	130.0	50.5	65.0	140.0	
DN40	140.0	50.5	70.0	150.0	
DN50	164.0	64.0	70.0	160.0	
DN65	190.0	77.5	90.0	180.0	

No.SQ11014

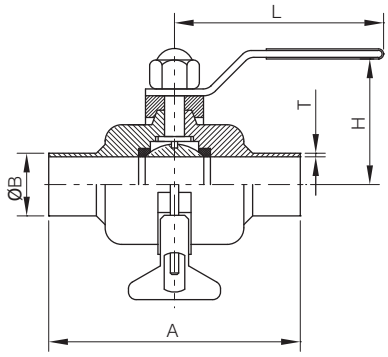

焊接式无滞留球阀
Welded Non-retention Ball Valve

Size	A	B	H	L	T
DN15	90.0	18.0	55.0	125.0	1.5
DN20	100.0	22.0	55.0	125.0	1.5
DN25	110.0	28.0	55.0	125.0	1.5
DN32	120.0	34.0	55.0	140.0	1.5
DN40	140.0	40.0	65.0	150.0	1.5
DN50	164.0	52.0	75.0	160.0	1.5v
DN65	170.0	70.0	85.0	180.0	2.0

No.SQ12015

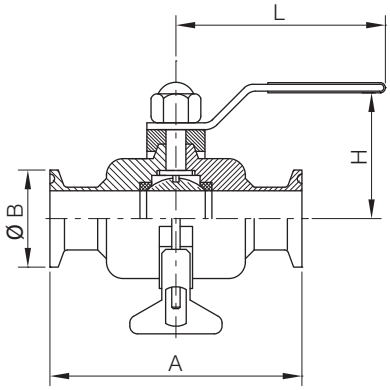

卡箍式无滞留球阀
Clamped Non-retenion Ball Valve

Size	A	B	H	L	
DN15	90.0	50.5	55.0	125.0	
DN20	100.0	50.5	55.0	125.0	
DN25	110.0	50.5	55.0	125.0	
DN32	120.0	50.5	55.0	140.0	
DN40	140.0	50.5	65.0	150.0	
DN50	164.0	64.0	75.0	160.0	
DN65	170.0	77.5	85.0	180.0	

3A 卫生级直通球阀
Sanitary Straight Ball Valve

No.SQ22016

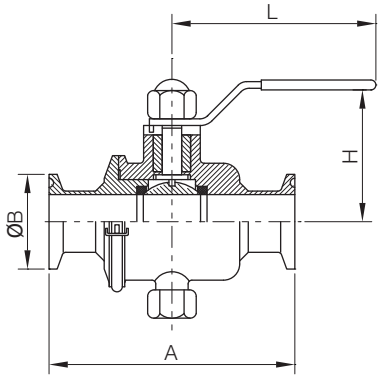

卡箍轻便式球阀
Clamped Portable Ball Valve

Size	A	B	H	L	
3/4"	95.0	25.4	55.0	125.0	
1"	120.0	50.5	55.0	125.0	
1 1/4"	130.0	50.5	55.0	140.0	
1 1/2"	140.0	50.5	65.0	150.0	
2"	164.0	64.0	75.0	160.0	
2 1/2"	190.0	77.5	85.0	180.0	

No.SQ21017

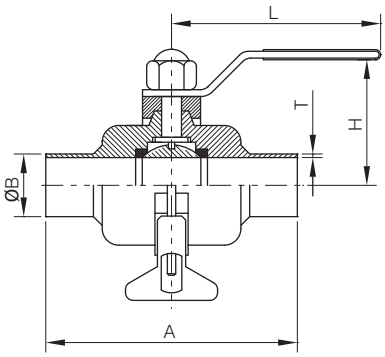

焊接式无滞留球阀
Welded Non-retention Ball Valve

Size	A	B	H	L	T
3/4"	90.0	19.05	55.0	125.0	1.65
1"	100.0	25.4	55.0	125.0	1.65
1 1/4"	110.0	31.8	55.0	140.0	1.65
1 1/2"	120.0	38.1	65.0	150.0	1.65
2"	140.0	50.8	75.0	160.0	1.65
2 1/4"	164.0	57.0	85.0	180.0	1.65
2 1/2"	170.0	63.5	85.0	180.0	1.65

No.SQ22018

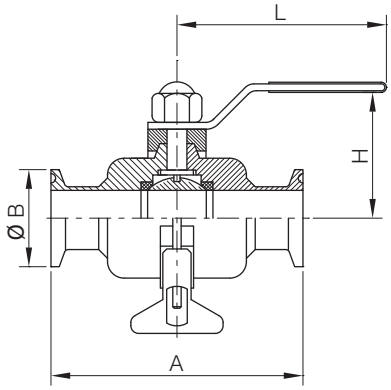

卡箍式无滞留球阀
Clamped Non-retenion Ball Valve

Size	A	B	H	L	
3/4"	90.0	25.4	55.0	125.0	
1"	100.0	50.5	55.0	125.0	
1 1/4"	110.0	50.5	55.0	140.0	
1 1/2"	120.0	50.5	65.0	150.0	
2"	140.0	64.0	75.0	160.0	
2 1/4"	164.0	77.5	85.0	180.0	
2 1/2"	170.0	77.5	85.0	180.0	

SMS 卫生级直通球阀
Sanitary Straight Ball Valve

No.SQ32019

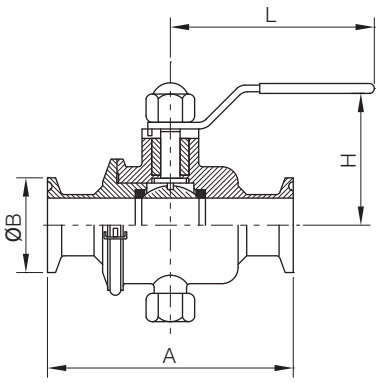

卡箍轻便式球阀
Clamped Portable Ball Valve

Size	A	B	H	L	
19	95.0	25.4	55.0	125.0	
25	120.0	50.5	55.0	125.0	
32	130.0	50.5	55.0	140.0	
38	140.0	50.5	65.0	150.0	
51	164.0	64.0	75.0	160.0	
63	190.0	77.5	85.0	180.0	

No.SQ31020

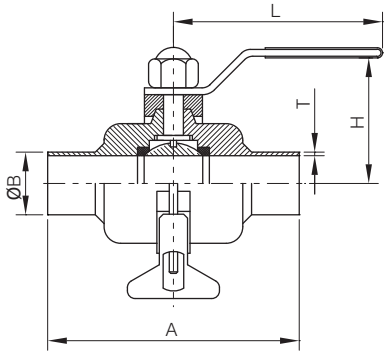

焊接式无滞留球阀
Welded Non-retention Ball Valve

Size	A	B	H	L	T
19	90.0	19.05	55.0	125.0	1.5
25	100.0	25.4	55.0	125.0	1.5
32	110.0	31.8	55.0	140.0	1.5
38	120.0	38.1	65.0	150.0	1.5
51	140.0	50.8	75.0	160.0	1.5
57	164.0	57.0	85.0	180.0	2.0
63	170.0	63.5	85.0	180.0	2.0

No.SQ32021

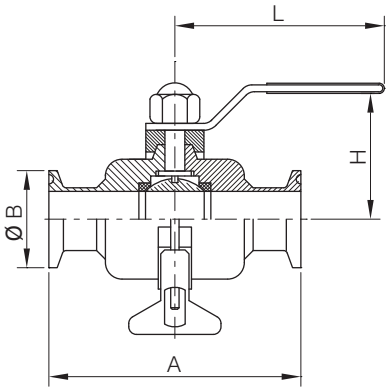

卡箍式无滞留球阀
Clamped Non-retenion Ball Valve

Size	A	B	H	L	
19	90.0	25.4	55.0	125.0	
25	100.0	50.5	55.0	125.0	
32	110.0	50.5	55.0	140.0	
38	120.0	50.5	65.0	150.0	
51	140.0	64.0	75.0	160.0	
57	164.0	77.5	85.0	180.0	
63	170.0	77.5	85.0	180.0	

ISO/IDF

卫生级直通球阀
Sanitary Straight Ball Valve

No.SQ42022

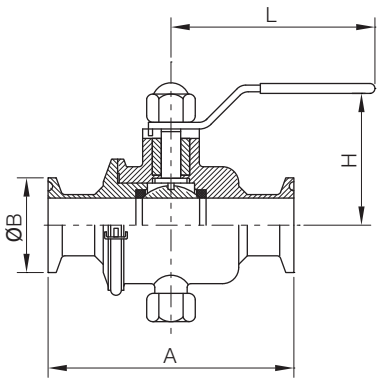

卡箍轻便式球阀
Clamped Portable Ball Valve

Size	A	B	H	L	
Ø19	105.0	25.4	55.0	125.0	
Ø25	125.0	50.5	55.0	140.0	
Ø32	132.0	50.5	65.0	150.0	
Ø38	140.0	50.5	65.0	160.0	
Ø51	159.0	64.0	85.0	180.0	
Ø63	180.0	77.5	85.0	200.0	

No.SQ41023

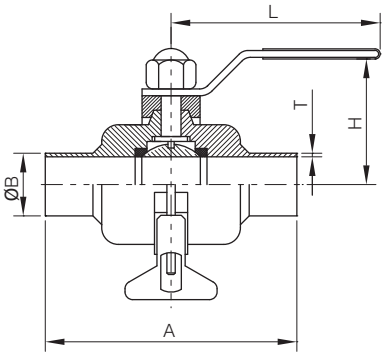

焊接式无滞留球阀
Welded Non-retention Ball Valve

Size	A	B	H	L	T
Ø19	90.0	19.05	65.0	105.0	1.5
Ø25	100.0	25.4	70.0	105.0	1.5
Ø32	120.0	32.0	80.0	130.0	1.5
Ø38	140.0	38.1	80.0	150.0	1.5
Ø51	164.0	50.8	85.0	160.0	1.5
Ø57	170.0	57.0	110.0	180.0	2.0
Ø63	180.0	63.5	110. 0	180.0	2.0

No.SQ42024

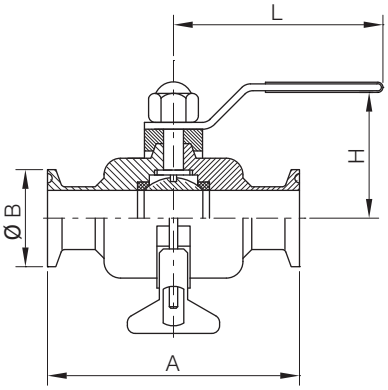

卡箍式无滞留球阀
Clamped Non-retenion Ball Valve

Size	A	B	H	L	
Ø19	90. 0	25. 4	65.0	105.0	
Ø25	100. 0	50. 5	70.0	105.0	
Ø32	120. 0	50. 5	80.0	130.0	
Ø38	140. 0	50. 5	80.0	150.0	
Ø51	164. 0	64. 0	85.0	160.0	
Ø57	170. 0	77. 5	110.0	180.0	
Ø63	180.0	77. 5	110.0	180.0	

DIN

卫生级直通球阀
Sanitary Straight Ball Valve

No.SQ12025

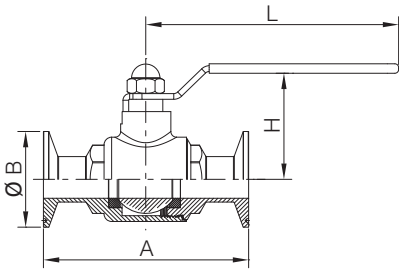

卡箍式直通球阀
Clamped Straight Ball Valve

Size	A	B	H	L	
DN20	120.0	50.5	55.0	125.0	
DN25	130.0	50.5	55.0	125.0	
DN32	140.0	50.5	55.0	140.0	
DN40	164.0	64.0	65.0	150.0	
DN50	190.0	77.5	75.0	160.0	
DN65	210.0	91.0	85.0	180.0	
DN80	230.0	106.0	100.0	260.0	
DN100	260.0	119.0	120.0	350.0	

No.SQ14026

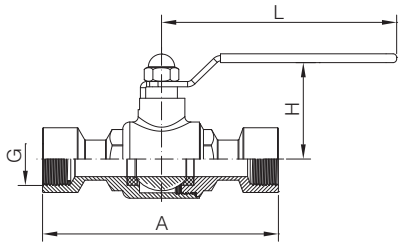

内螺纹式直通球阀
Femaled Straight Ball Valve

Size	A	G	H	L	
DN20	120.0	G3/4-14	55.0	125.0	
DN25	130.0	G1-11	55.0	125.0	
DN32	140.0	G11/4-11	55.0	140.0	
DN40	164.0	G11/2-11	65.0	150.0	
DN50	190.0	G2-11	75.0	160.0	
DN65	210.0	G21/2-11	85.0	180.0	
DN80	230.0	G3-11	100.0	260.0	
DN100	260.0	G4-11	120.0	350.0	

No.SQ13027

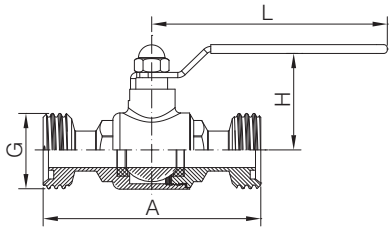

外螺纹式直通球阀
Maled Straight Ball Valve

Size	A	G	H	L	
DN20	120.0	RD44X1/6	55.0	125.0	
DN25	130.0	RD52X1/6	55.0	125.0	
DN32	140.0	RD58X1/6	55.0	140.0	
DN40	164.0	RD65X1/6	65.0	150.0	
DN50	190.0	RD78X1/6	75.0	160.0	
DN65	210.0	RD95X1/6	85.0	180.0	
DN80	230.0	RD110X1/4	100.0	260.0	
DN100	260.0	RD130X1/4	120.0	350.0	

SMS 卫生级直通球阀
Sanitary Straight Ball Valve

No.SQ32028

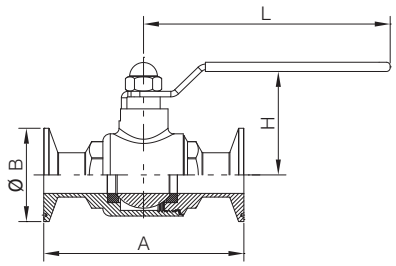

卡箍式直通球阀
Clamped Straight Ball Valve

Size	A	B	H	L	
19	95.0	50.5	55.0	125.0	
25	120.0	50.5	55.0	125.0	
32	130.0	50.5	55.0	140.0	
38	140.0	50.5	65.0	150.0	
51	164.0	64.0	75.0	160.0	
63	190.0	77.5	85.0	180.0	
76	210.0	91.0	100.0	260.0	
101.6	260.0	119.0	120.0	350.0	

No.SQ34029

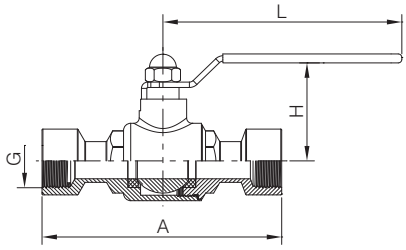

内螺纹式直通球阀
Femaled Straight Ball Valve

Size	A	G	H	L	
19	120.0	G3/4-14	55.0	125.0	
25	130.0	G1-11	55.0	125.0	
32	140.0	G11/4-11	55.0	140.0	
38	164.0	G11/2-11	65.0	150.0	
51	190.0	G2-11	75.0	160.0	
63	210.0	G21/2-11	85.0	180.0	
76	230.0	G3-11	100.0	260.0	
101.6	260.0	G4-11	120.0	350.0	

No.SQ33030

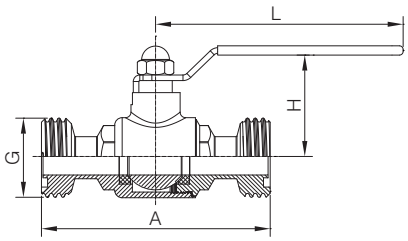

外螺纹式直通球阀
Maled Straight Ball Valve

Size	A	G	H	L	
19	95.0	RD36X1/8	55.0	125.0	
25	120.0	RD40X1/6	55.0	125.0	
32	130.0	RD48X1/6	55.0	140.0	
38	140.0	RD60X1/6	65.0	150.0	
51	164.0	RD70X1/6	75.0	160.0	
63	195.0	RD85X1/6	85.0	180.0	
76	210.0	RD98X1/6	100.0	260.0	
101.6	260.0	RD125X1/4	120.0	350.0	

ISO/IDF

卫生级直通球阀
Sanitary Straight Ball Valve

No.SQ42031

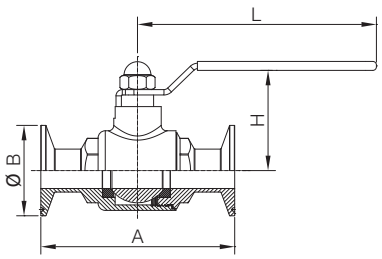

卡箍式直通球阀
Clamped Straight Ball Valve

Size	A	B	H	L
Ø19	95.0	50.5	55.0	125.0
Ø25	120.0	50.5	55.0	125.0
Ø32	130.0	50.5	55.0	140.0
Ø38	140.0	50.5	65.0	150.0
Ø51	164.0	64.0	75.0	160.0
Ø63	190.0	77.5	85.0	180.0
Ø76	210.0	91.0	100.0	260.0
Ø102	260.0	119.0	120.0	350.0

No.SQ44032

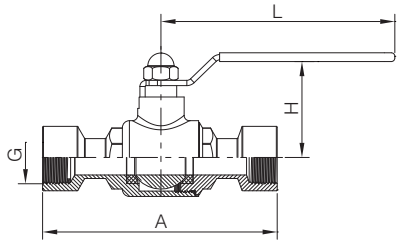

内螺纹式直通球阀
Femaled Straight Ball Valve

Size	A	G	H	L
Ø19	120.0	G3/4-14	55.0	125.0
Ø25	130.0	G1-11	55.0	125.0
Ø32	140.0	G11/4-11	55.0	140.0
Ø38	164.0	G11/2-11	65.0	150.0
Ø51	190.0	G2-11	75.0	160.0
Ø63	210.0	G21/2-11	85.0	180.0
Ø76	230.0	G3-11	100.0	260.0
Ø102	260.0	G4-11	120.0	350.0

No.SQ43033

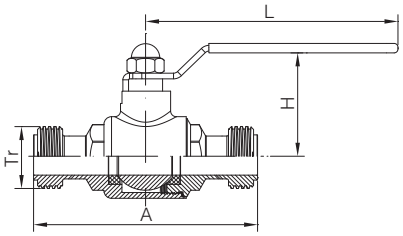

外螺纹式直通球阀
Maled Straight Ball Valve

Size	A	Tr	H	L
Ø19	95.0	36.5X3	45.0	125.0
Ø25	120.0	40X3	55.0	125.0
Ø32	140.0	46X3	55.0	140.0
Ø38	165.0	55X3	75.0	150.0
Ø51	190.0	65X4	85.0	160.0
Ø63	210.0	80X4	100.0	180.0
Ø76	220.0	90X4	110.0	260.0
Ø102	260.0	100X4	120.0	350.0

三片式球阀
Sanitary Ball Valve

手把位置加装锁片：
100% 经过水下 100PSI 测试开启关闭完全工作
水压测试 1/4” ~ 2” , 1500PSI 2-1/2” ~ 4”
1200PSI

连接方式：焊式和夹式
其它的 SMS DIN RJT IDF 螺纹方式等可以根据需要
定制。

Locking device can be required
100% air tested under water at 100psi,
open and closed positions.
Hydrostatic test presssure 1/4"~2" 1,500psi,
21/2"~4" 1,200psi

Standard End :Weld & Clamp-End
Other SMS.DIN .RJT IDF
Male/Male can be required.

焊式 Weld End

内螺纹 Male End

夹式 Clamp End

加长形 Long End

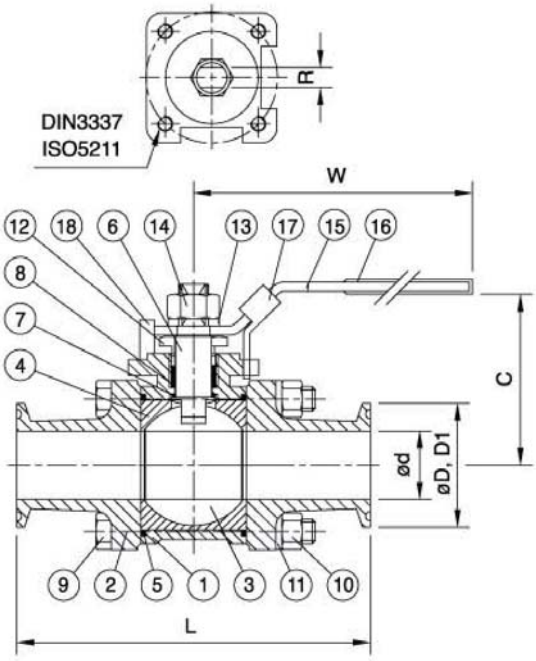

No	PART NAME	MATERIAL
1	BODY	ASTM-A351-CF8M
2	CAP	ASTM-A351-CF8M
3	BALL	A351-CF8M
4	SEAT	PTFE
5	GASKET	PTFE
6	STEM	316
7	THRUST WASHER	PFE
8	STEM PACKING	PTFE
9	BOLT	304
10	HEX NUT	304
11	BOLT WASHER	304
12	GLAND	304
13	WASHER	304
14	NUT	304
15	HANDLE	304
16	PLASTLC COVER	PLASTLC
17	LOCK DEVLCE	304
18	STOP PIN	304

Specifications fir Clamp & Weld End

SIZE	DN	ISO 5211	C	L	W	ød	øD	øD1	R	L1
1/2"	15	F03	60	89	132	9.5	25.4	12.7	5	32.75
3/4"	20	F03	64.5	101	131.5	15.8	25.4	19.05	5	36.5
1"	25	F04	69.2	114	165	22.2	50.4	25.4	6.5	40
1-1/2"	40	F05	89.26	140	194.3	35	50.4	38.1	8.5	43.5
2"	50	F05	97.26	156	194.3	47.6	63.9	50.8	8.5	45.75
2-1/2"	65	F07	126.7	197	252	60.3	77.5	63.5	12	56
3"	80	F07	135.3	229	252	73	90.9	76.2	12	64.5
4"	100	F10	158.8	242.7	332	97.4	118.9	101.6	16	60.6