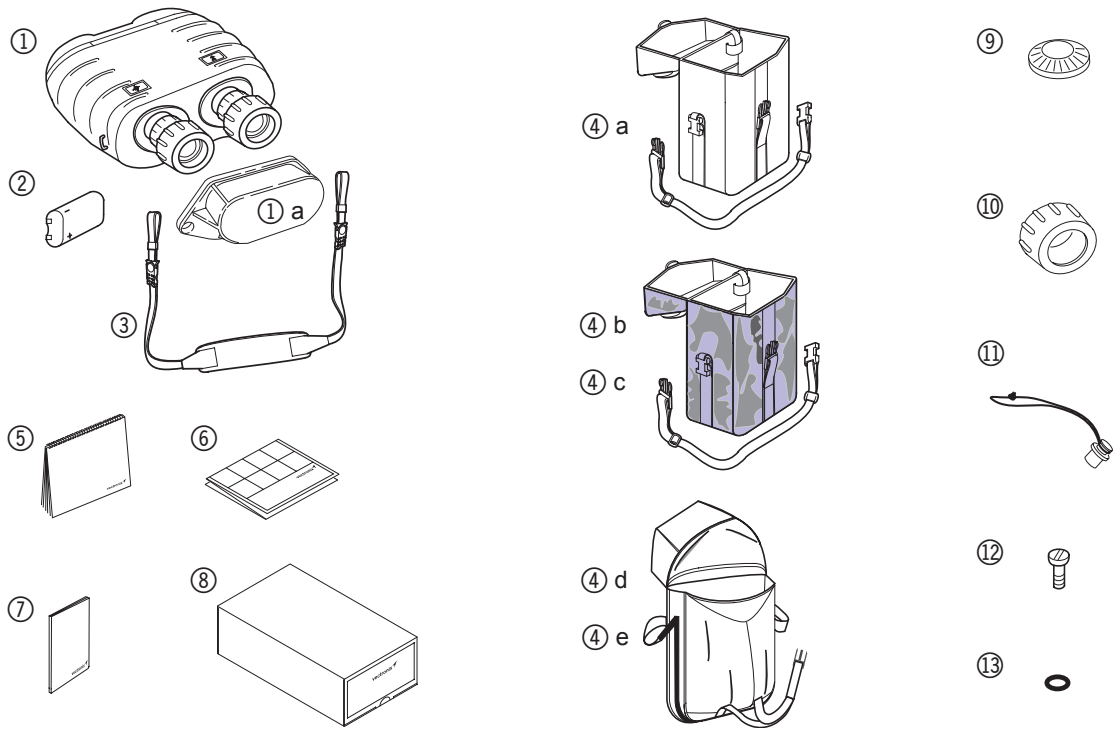

Rangefinder Binoculars

VECTOR 23

Basic equipment

Item	Article No.	Description
1	906 098	VECTOR 23 Rangefinder Binoculars with distance, azimuth and elevation measurement, data interface, reticle (Swiss II) and accessories
		Included in item 1:
1a	702 956	Eyepiece protection cover
2	535 314	SEB50 Lithium battery, 6V, 2CR5
3	636 965	STR1 Neck strap for VECTOR
		Pouch, selection of:
4a	636 895	SVP240 Pouch for VECTOR, grey
4b	664 654	SVP271 Pouch for VECTOR, camouflage
4c	667 001	SVP272 Pouch for VECTOR plus Binocular enhancer, camouflage, large
4d	724 453	SVP283-1 Pouch for VECTOR and mini-tripod SST3-1, green
4e	901 845	SVP303 Pouch for VECTOR and mini-tripod SST3-2, green
5		User manual (selection: English, German French, Spanish)
6	633 396	Short instruction
7	636 117	Lens tissue
8	637 068	Cardboard box

Spare parts

Item	Article No.	Description
9	563 940	Button for eye-base adjustment
10	637 051	Eyecup for VECTOR
11	901 620	Protection cap with cord for interface connector
12	901 665	M4 Screw for battery compartment cover
13	434 487	O-ring seal (screw battery compartment cover)

Please note
Additional accessories, cables and tripods are listed on the separate data sheets VECTOR - Accessories and VECTOR - Tripods / Monopods

vectronix

Technical Data VECTOR 23

Optics	
Observation	binocular
Magnification	7x
Field of view	120mil / 6.75°
Objective diameter	42mm
Focus	fixed
Reticle	red LED square activated by key and glass reticle with 5mil graduation
Eye relief	18mm
Dioptric setting	> ± 4 diopters
Eye-base adjustment	58.5mm to 71.5mm
1064nm laser protection	attenuation factor O.D. > 4

Rangefinder (distance)	
Laser type	1550nm, class 1 eye-safe per IEC 60825-1 Ed 2.0 (2007-03), ANSI Z 136.1 (2007)
Range capability	25m to 25000m
Specified performance	10200m at visibility 20km, 2.3 x 2.3m target, albedo 0.3 detection probability 90%,
Accuracy (1σ)	± 5m (500 to 12000m)
False alarm rate	< 2%
Resolution on display	1m / 1yd / 1ft
Multiple targets	up to 3 targets in line of sight
Time per measurement	< 0.6s
Repetition rate	12 per minute
Beam divergence	< 0.3mil

Digital Magnetic Compass (azimuth and inclination)	
Units	6400, 6300, 6000mil / 360° / 400gon
Resolution on display	1mil / 1° / 1gon
Azimuth accuracy (1σ)	± 10mil / ± 0.6°
with PPS calibration on tripod, typical (1σ)	± 5mil / ± 0.3°
Inclination accuracy (1σ)	± 3mil / ± 0.2°
Maximum inclination angle	45° in any direction (inclination and bank)
Declination, adjustable	± 999mil / ± 99.9° / ±99.9gon
Compass calibration	menu guided

Display	
Type	light emitting diodes (LED) with automatic brightness control and dimming for image intensifiers
Data displayed	slope distance, azimuth, inclination, horizontal distance, height difference; distance between two points and other functions according to user manual
Unit settings	distance: meter, yard, feet angle: mil, degree, gon

Data interface	
Standard interface type	RS232
optional	RS422, RS485
External GPS capability	Rockwell Collins PLGR+96/PLGR II/DAGR Garmin 12/60/72/76 other models upon request

Power supply	
Standard, on-board	6V lithium battery type 2CR5
Battery capacity (20°C)	> 5000 measurements, low battery indicator
External power	7VDC to 14VDC

Environmental conditions, tested to MIL-STD-810	
Waterproof	1m, 30 minutes
optional	10m, 30 minutes
Operational temperature	-35°C to +63°C -31°F to +145°F
Storage temperature	-40°C to +85°C -40°F to +185°F
Shock	40g / 11ms / xyz
Vibration	10 to 500Hz in 10 minutes

Physical	
Housing	light alloy / aluminium in shock absorbing, resistant rubber armoring
Colour	brown
Tripod interface	standard ¼ inch thread
Dimensions	
length	205mm / 8.1in
width	178mm / 7.0in
height	82mm / 3.2in
Weight with battery	< 1.8kg / 3.97lbs
Volume	1.9 liter

vectronix

Vectronix AG
Max-Schmidheiny-Strasse 202
CH-9435 Heerbrugg
Switzerland
Telephone +41 71 726 72 00
Fax +41 71 726 72 01
www.vectronix.ch

VECTOR™ is a trademark of Vectronix AG, Heerbrugg, Switzerland

Illustrations, descriptions and technical data are not binding and may be changed.
Printed in Switzerland – Copyright Vectronix AG, Heerbrugg, Switzerland, 2005
906 120 – III.10 – INT