SYM12864J

v1.0

ShenZhen TCC LCD Hi-Tech CO,.Ltd
TEL:13430801109 075529644106 FAX:27897479
http://www.lcdlcm.net
Email:tccsz@163.com
地址：深圳市宝安区39区4号厂房2楼

① PHYSICAL DIMENSION/外型尺寸

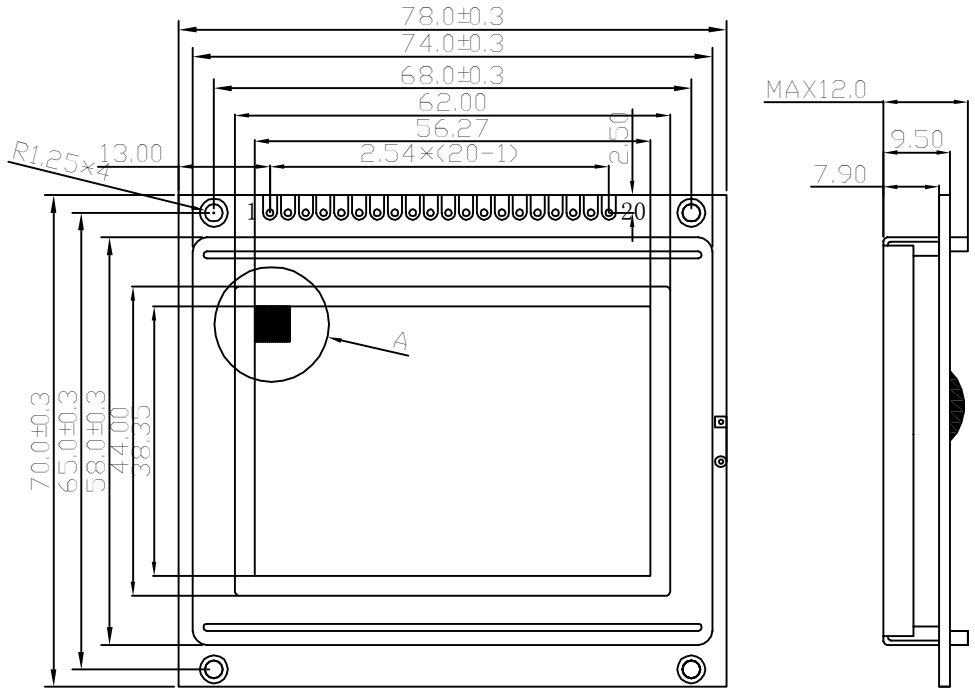

Disply Format
128×64DOTS
Drlvlng Merhod
1/64 Duty
1/9 Bais

② FEATURES/特征

Feature(特征)		UNIT(单位)
LCD type & Colour(类型及颜色)	STN Yellow-green ;STN Blue	
View Angle(视角)	6 0'clock	
Operating temperature(工作温度)	-20℃ ---- 70℃	
Storage Temperature(贮存温度)	-30℃ ---- 80℃	
Control IC & Package(控制芯片及封装)	ST7920 , COB	
Weight(重量)	69 (With B/L)	g
Backlight(背光类型)	LED	

Ta=25℃		MIN(最小)	TYP(典型)		MAX(最大)	UNIT(单位)
Supply current don't contain backlight(无背光时电流)		0		12.0		mA
VDD(电源)		-0.3		5.0	5.5	V
VLCD-V0(LCD驱动电压)		0		6.8		V
Backlight LED (背光电压,电流)	侧背光	0		5.0	5.0	V
		0		75		mA
	底背光	0		5.0	5.5	V
		0		180		mA

③ PIN CONFIGURATION/管脚说明

PIN	SYMBOL	DESCRIPTION(定义描述)
1	VSS	Power ground (地)
2	VDD	Power positive(逻辑电压)
3	V0	Operating voltage for LCD Driver(对比度调节)
4	CS	Chip select signal(片选)
5	R/W	Read or Write.(写数据)
6	E	Enable trigger.(使能信号)
7 ~ 14	DB0 ~ DB7	Data bus [0~7]. There state I/O common terminal.(数据线0-7)
15	PSB	H:Data L:Instruction Code(指令 数据信号)
16	NC	No connection
17	RST	Reset Signal (复位)
18	VOUT	Negative voltage output (负压输出)
19	BLA	Power supply for backligh(+)(背光正极)
20	BLK	Power supply for backligh(+)(背光负极)

④ BLOCK DIAGRAM/原理电路

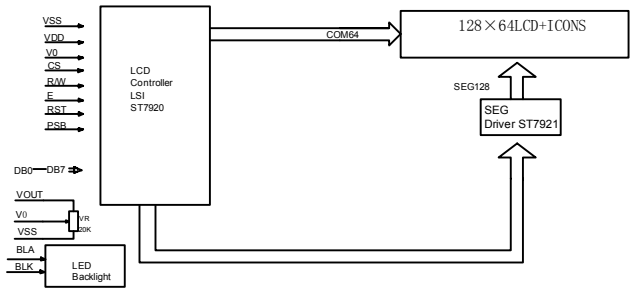

⑤ ELUCIDATION/补充备注

1, contain the controller cent simplified Chinese character of the Chinese word database and traditional Chinese character [1，含中文字库控制器分简体中文和繁体中文]