特种热电阻、热电偶
Special thermal resistance and thermocouple

耐磨型热电偶、热电阻Abrasion-proof thermocouple and thermal resistance

沸腾炉、循环流化床炉，水泥回转窑窑尾温度高，且有流动物料磨损，并有多种有害气体的腐蚀，使用一般温度传感器往往需频繁地更换，不但增加仪表工的劳动强度和生产成本，且给安全生产带来了较大隐患。近年来从保护管和测温元件上进行了改进，研制出了高温耐磨热电偶，有效的提高了使用期和测温的可靠性，较好地解决了以上的问题。

Because of the high temperature in the charge end of furnace in fluid bed, circulating fluid bed and cement rotary kiln, the wear of the material flow and the corrosion caused by diversified harmful gases, the temperature sensor always needs to be changed frequently, which not only increases the labour intensity of instrument workers and production cost but brings about serious hidden danger. In these years, the development of high temperature abrasion-proof thermocouple based on the improvement on the protection tube and temperature measurement elements efficiently improves the lifetime and thermometric reliability of the sensor and perfectly solves the above problems.

高温耐磨型热电偶、热电阻High abrasion-proof thermocouple and thermal resistance

采用特种工艺和特种耐磨合金材料保护管，其硬度达到HRC85~90，具有优良的耐磨及耐腐蚀性能。适用于电站循环流化床锅炉（CFB）温度，一次风煤粉混合温度，磨煤机的进出口温度和制粉系统温度的测量。以及石油裂解温度、建筑沥青混合物温度，流动粉末、粒子物温度的测量。

Adopting the special technology and abrasion-proof alloy material protection tube with its degree of hardness up to HRC85~90 and having the good performance in abrasion-proof and corrosion-resisting, they are applicable to the temperature measurement of the circulating fluid bed boiler (CFB) of power plant, the mixing temperature of coal dust caused by primary air flow, the inlet and outlet of the coal grinding machine, the pulverizing system, the petroleum cracking, the building asphalt mixture and the flow dust and particle.

本系列电偶主要用于流化床炉、沸腾炉、煤粉炉、水泥回转窑测温，也可用于其它同等工况的场合。

The thermocouple of this series is mainly used to the temperature measurement of fluidized bed furnace, furnace in fluid bed and coal dust furnace. They are also available under other same working conditions.

上海南浦仪表厂 Shanghai Nanpu Metering Factory 021-33040769

热电偶、铂热电阻温度范围及允差

Temperature range and difference of the thermocouple and platinum thermal resistance

类型 Type	分度号 Graduation Mark	型号 Model	温度范围（℃） Temperature Range	允差等级 Allowance Grade		允差等级 Allowance Grade	
热电偶 Thermocouple	S	WRP	0～1600	1级 1Grade	1℃或±[1+0。003（t−1100)]℃ 1℃ or ±[1+0。003（t−1100)]℃	2级 2Grade	±1.5℃或±0.0025 ·|t| ±1.5℃ or ±0.0025 ·|t|
热电偶 Thermocouple	K	WRK	−40～+1200	1级 1Grade	±1.5℃ or ±0.004 ±1.5℃ or ±0.004	2级 2Grade	±2.5℃或±0.0075 ·|t| ±2.5℃ or ±0.0075 ·|t|
热电偶 Thermocouple	E	WRE	−40～+800	1级 1Grade	±1.5℃ or ±0.004 ±1.5℃ or ±0.004	2级 2Grade	±2.5℃或±0.0075 ·|t| ±2.5℃ or ±0.0075 ·|t|
铂热电阻 Platinum thermal resistance	Pt100	WZP	−200～+500	A级 1Grade	±(1.5+0.002|t|)	B级 2Grade	±(0.30+0.005|t|)

注：|t|为测量端温度t的绝对值。 Note：□t□ is the absolute value of the measured end temperature.

热电偶的偶丝和推荐使用的最高温度

Thermocouple wire and its recommended maximum temperature for using

分度号 Graduation Mark	偶丝直径（mm） Diameter of thermocouple wire	0.3	0.5	0.8	1.0	1.2	1.6	2.0	2.5	3.2
S	长期使用最高温度（℃） Maximum temperature for long-term use	–	1300	–	–	–	–	–	–	–
S	短期使用最高温度（℃） Maximum temperature for Short-term use	–	1600	–	–	–	–	–	–	–
K	长期使用最高温度（℃） Maximum temperature for long-term use	700	800	900	900	1000	1000	1100	1100	1200
K	短期使用最高温度（℃） Maximum temperature for Short-term use	800	900	1000	1000	1100	1100	1200	1200	1300
E	长期使用最高温度（℃） Maximum temperature for long-term use	350	350	450	450	450	550	550	650	750
E	短期使用最高温度（℃） Maximum temperature for Short-term use	450	450	550	550	550	650	650	750	900

注：热电偶的长期使用温度极限与偶丝直径有关，丝径愈粗，使用温度愈高。

Note: The maximum temperature for long-term use of thermocouple is up to its diameter. The thicker the wire is, the higher the temperature for use will be.

铠装热电偶（绝缘型）材料及使用的最高温度

Material of sheathed thermocouple (insulating type) and its maximum temperature for use

分度号 Graduation Mark	套管材料（牌号/代号） Sheathed tube material (Brand/Code)	直径 d (mm) Diameter	长期使用最高温度（℃） Maximum temperature for long-term use	短期使用最高温度（℃） Minimum temperature for short-term use
S	GH3030	5.0,6.0,8.0	1100	1200
K	GH3030、310S	4.0,5.0	1000	1100
K	GH3030、310S	6.0,8.0	1100	1200
K	1Cr18Ni9Ti、304、316	4.0,5.0,6.0,8.0	800	900
E	1Cr18Ni9Ti、304、316	3.0,4.0,5.0,6.0	600	700

注：热电偶的长期使用温度极限与偶丝直径有关，丝径愈粗，使用温度愈高。

Note: The maximum temperature for long-term use of thermocouple is up to its diameter. The thicker the wire is, the higher the temperature for use will be.

上海南浦仪表厂 Shanghai Nanpu Meter Factory 021-33040697

高耐磨型热电偶、热电阻High abrasion-proof thermocouple and thermal resistance

型号 Model	分度号 Graduation Mark	测量范围(℃) Measuring Range(℃)	规格 Specification L X l
WRNHAR-02 WRNHAR$_2$-02	K	0~800 *0~1000	300×150 350×200 400×250 450×300 550×400 650×500 900×750 1000×850 1200×1050
WRNHAR-02 WRNHAR$_2$-02			
WREHAR-02 WRNHAR$_2$-02	E	0~600	
WZPHAR-02 WZPHAR$_2$-02	Pt100	0~500	

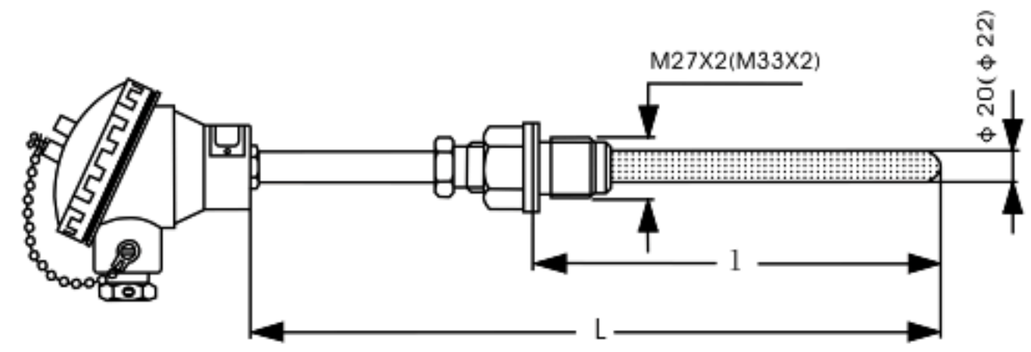

注：（1）内芯均为铠装元件。*内芯的保护管材料为耐高温合金不锈钢。（2）直形保护管固定螺栓规格参见安装图。

Note: (1) The inner core shall be sheathed elements. The protection tube material of the inner core shall be high temperature alloy stainless steel. (2) See for the specification of the straight lined protection tube fixed bolt.

高耐磨型热电偶、热电阻High abrasion-proof thermocouple and thermal resistance

型号 Model	分度号 Graduation Mark	测量范围(℃) Measuring Range(℃)	规格 Specification L X l
WRNHAR-04 WRNHAR$_2$-04	K	0~800 *0~1000	300×150 350×200 400×250 450×300 550×400 650×500 900×750 1000×850 1200×1050
WRNHAR-04 WRNHAR$_2$-04			
WREHAR-04 WRNHAR$_2$-04	E	0~600	
WZPHAR-04 WZPHAR$_2$-04	Pt100	0~500	

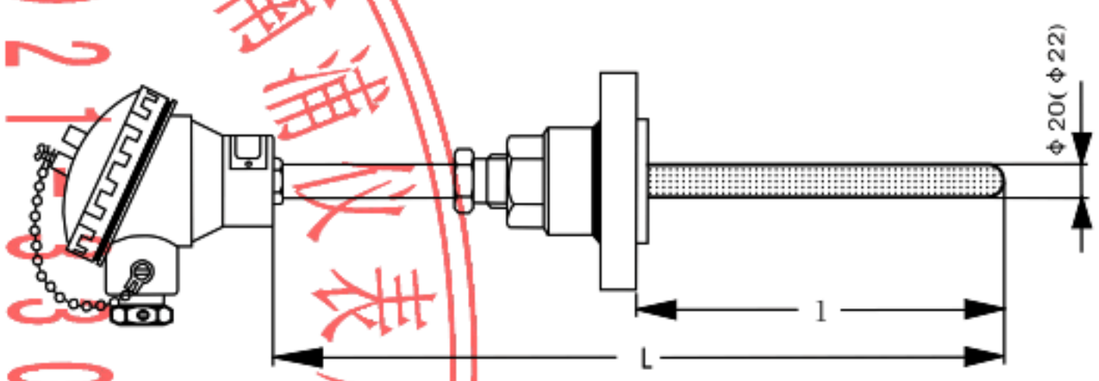

注：（1）内芯均为铠装元件。*内芯的保护管材料为耐高温合金不锈钢。（2）型号后面加“A”为ANSI标准法兰。选用JB/T标准法兰，

Note: (1) The inner core shall be sheathed elements. The protection tube material of the inner core shall be high temperature alloy stainless steel. (2) Model with “A” at the end shall be ANSI standard flange. If the JB/T standard. flange is used,

耐磨型热电偶、铂热电阻Abrasion-proof thermocouple and platinum thermal resistance

型号 Model	分度号 Graduation Mark	测量范围(℃) Measuring Range(℃)	规格 Specification d	L x l
WRNN-23220TH WRNN$_2$-23220TH	K	*0~1000	ϕ20	300×150 350×200 400×250 450×300 550×400 650×500 900×750 1150×1000 1650×1500 2150×2000
WRNN-23225TH WRNN$_2$-23225TH	K	*0~1000	ϕ25	
WREN-23220TH WREN$_2$-23220TH	E	0~600	ϕ20	
WREN-23225TH WREN$_2$-23225TH	E	0~600	ϕ25	
WZPN-23220TH WZPN$_2$-23220TH	Pt100	0~500	ϕ20	

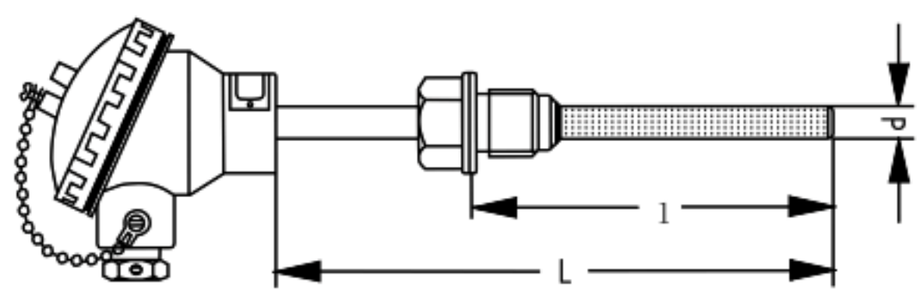

注：（1）*保护管材料为耐高温合金不锈钢。采用复合型耐温材料。（2）直形保护管固定螺栓规格参见安装图。

Note: (1) The protection tube material of the inner core shall be composite material of high temperature alloy stainless steel. (2) See page for the specification of the straight lined protection tube fixed bolt.

上海南浦仪表厂 Shanghai Nanpu Meter Factory 021-33040769

高温耐磨热电偶High temperature abrasion-proof thermocouple

型 号 Model	分度号 Graduation Mark	测量范围(℃) Measuring Range(℃)	保护管规格（mm）Specification of protection tube（mm）		公称压力（MPa）Nominal pressure（MPa）	图示 Diagrammatic view
			d	l_1		
WRN-13□N-K WRN_2-13□N-K	K	0~1300	φ18 φ22 φ25 φ32	300 350 400 450 500	常压 Normal pressure	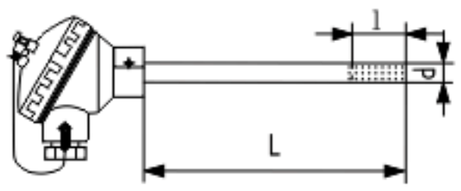 无固定装置 Non-fixing device
WRN-23□N-K WRN_2-23□N-K					10	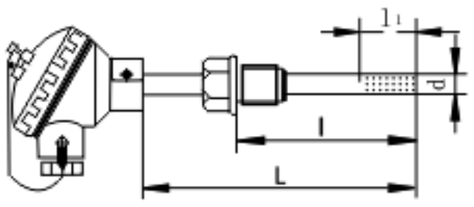 固定螺栓式 Fixed bolt type
WRN-33□N-K WRN_2-33□N-K					常压 Normal pressure	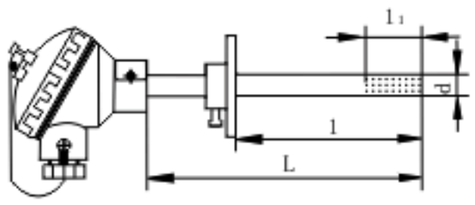 活动法兰式 Movable flamge type
WRN-43□N-K WRN_2-43□N-K					2.5	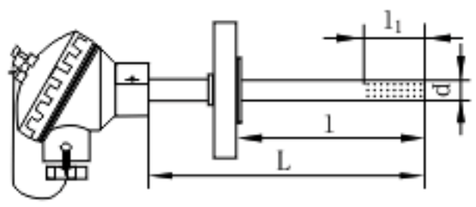 固定法兰式 Fixed flange type

注：（1）型号中□表示保护管的外径，用户可根据所选外径φ18φ22φ25和φ32分别选用。（2）型号中-K表示使用铠装内芯元件。（3）l_1 为耐磨合金保护管的长度，由插入炉膛的长度而定，通常 l_1为300mm~500mm。（4）固定螺栓和法兰规格参见安装图。

Note: (1) The mark □ in the model stands for the outer diameter of protection tube. Customers are free to choose φ18,φ22, φ25 or φ32. (2) K in the model stands for the sheathed inner core elements. (3) l_1 in the model stands for the length of the abrasion-proof resist alloy protection tube determined by the length in the furnace tank, usually stands for 300mm-500mm.

Shanghai nanpu meter factory 上海南浦仪表厂 021-33040697

高温盐浴炉用热电偶High temperature salt bath furnace thermocouple

采用粉末冶金工艺制成的金属陶瓷管具有优良的耐腐蚀、耐高温性能，用于机械行业高温盐浴炉连续测温。

It is produced by adopting power metallurgical technique and has a good performance in corrosion resistant and high temperature resistant, which can be used to continually take the temperature measurement on the high temperature salt bath furnace.

BaCl2熔盐：1280℃ 寿命＞1400小时

BaCl2 fused salt：1280℃ length of life ＞1400 hours

BaCl2+NaCl 熔盐：1000℃ 寿命＞1500小时

BaCl2+NaCl fused salt：1000℃ length of life＞1500 hours

KCl+NaCl 熔盐：1050℃ 寿命＞300小时

KCl+NaCl fused salt：1050℃ length of life＞300 hours

高温耐磨热电偶High temperature abrasion-proof thermocouple

型 号 Model	分度号 Graduation Mark	测量范围(℃) Measuring Range(℃)	保护管规格（mm） Specification of protection tube（mm）		公称压力（MPa） Nominal pressure（MPa）	图示 Diagrammatic view
			d	l_1		
WRN-13□N-K WRN_2-13□N-K	K	0~1300	ϕ18 ϕ22 ϕ25 ϕ32	300 350 400 450 500	常压 Normal pressure	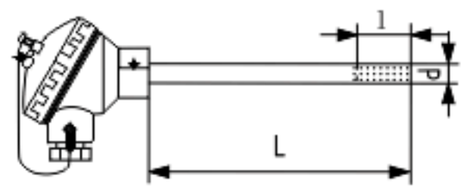 无固定装置 Non-fixing device
WRN-23□N-K WRN_2-23□N-K					10	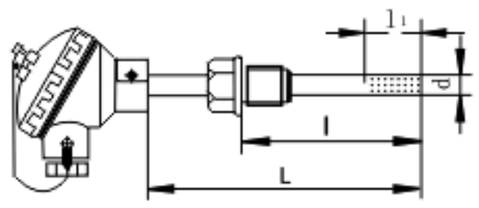 固定螺栓式 Fixed bolt type
WRN-33□N-K WRN_2-33□N-K					常压 Normal pressure	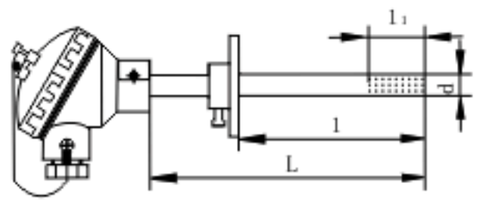 活动法兰式 Movable flamge type
WRN-43□N-K WRN_2-43□N-K					2.5	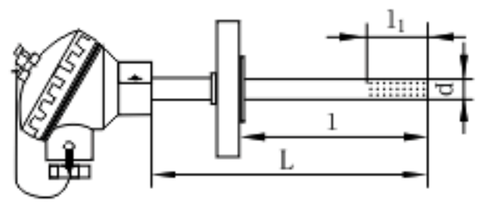 固定法兰式 Fixed flange type

注：（1）型号中□表示保护管的外径，用户可根据所选外径ϕ18ϕ22ϕ25和ϕ32分别选用。（2）型号中-K表示使用铠装内芯元件。（3）l_1 为耐磨合金保护管的长度，由插入炉膛的长度而定，通常 l_1为300mm~500mm。（4）固定螺栓和法兰规格参见91页，图147，92页，图150、图151。

Note: (1) The mark □ in the model stands for the outer diameter of protection tube. Customers are free to choose ϕ18, ϕ22, ϕ25 or ϕ32. (2) K in the model stands for the sheathed inner core elements. (3) l_1 in the model stands for the length of the abrasion-proof resist alloy protection tube determined by the length in the furnace tank. l_1 usually stands for 300mm-500mm. (4) See page 91, Fig 147, page 92, Fig 150 and 151 for the specification of fixed bolt and flange.

高温盐浴炉用热电偶High temperature salt bath furnace thermocouple

采用粉末冶金工艺制成的金属陶瓷管具有优良的耐腐蚀、耐高温性能，用于机械行业高温盐浴炉连续测温。

It is produced by adopting power metallurgical technique and has a good performance in corrosion resistant and high temperature resistant, which can be used to continually take the temperature measurement on the high temperature salt bath furnace.

BaCl2熔盐：1280℃ 寿命＞1400小时

BaCl2 fused salt：1280℃ length of life ＞1400 hours

BaCl2+NaCl 熔盐：1000℃ 寿命＞1500小时

BaCl2+NaCl fused salt：1000℃ length of life＞1500 hours

KCl+NaCl 熔盐：1050℃ 寿命＞300小时

KCl+NaCl fused salt：1050℃ length of life＞300 hours

上海南浦仪表厂 Shanghai nanpu meter Factory 021-33040697

高温盐浴炉用热电偶High temperature salt bath furnace special thermocouple

型号 Model	分度号 Graduation Mark	测量范围(℃) Measuring Range(℃)	热响应时间 τ0.5(s) Thermal response time τ0.5(s)	规格 specification L x l
WRP-530MC	S	0~1300	≤180	500×500 750×750
WRN-530MC	K	0~1200		
WRM-530MC	N	0~1200		

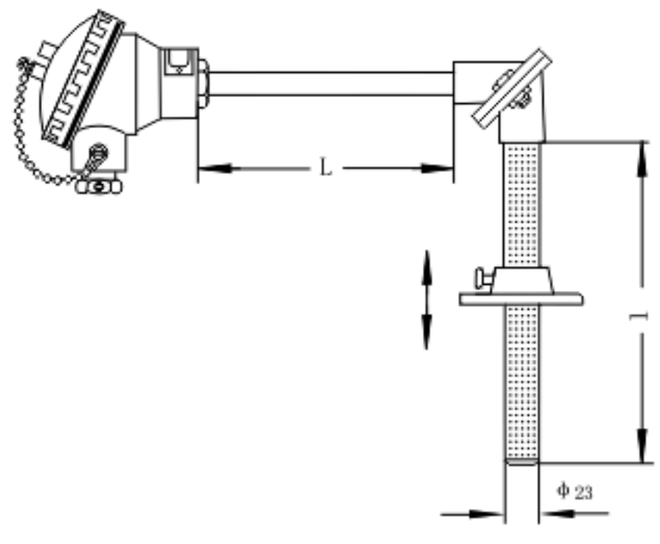

注：（1）公称压力为常压。（2）活动法兰规格参见安装图。

Note: (1) The nominal pressure shall be ordernary pressure. (2) See for the specification of flexible flange.

水泥回转窑用耐磨热电偶Cement rotary kiln abrasion-proof thermocouple

水泥回转窑有高温磨损，又有有害气体的腐蚀，是热电偶测温环境较差的场所。本系列产品具有耐高温、耐磨损、耐腐蚀等性能，可较好的用于水泥回转窑窑尾测温。本系列产品也可用于循环流化床的测温。

The thermocouple under the bad condition, such as cement rotary kiln, is likely to be influenced by its high temperature, wear and corrosion of harmful gases. The products of this series have a good performance in high temperature resistant, abrasion-proof resistant and corrosion resistant, which can be perfectly used to measure the temperature of cement rotary kiln charge end and also circulating fluid bed.

型 号 Model	分度号 Graduation Mark	测量范围(℃) Measuring Range(℃)	保护管规格（mm） Specification of protection tube（mm） d	l_1	公称压力（MPa） Nominal pressure（MPa）	图示 Diagrammatic view
WRN-13□N-K WRN_2-13□N-K	K	0~1300	ϕ18 ϕ22 ϕ25 ϕ32	300 350 400 450 500	常压 Normal pressure	无固定装置 Non-fixing device
WRN-23□N-K WRN_2-23□N-K					9.8	固定螺栓式 Fixed bolt type
WRN-33□N-K WRN_2-33□N-K					常压 Normal pressure	活动法兰式 Movable flamge type
WRN-43□N-K WRN_2-43□N-K					2.5	固定法兰式 Fixed flange type

注：（1）型号中□表示保护管的外径，用户可根据所选外径ϕ18ϕ22ϕ25和ϕ32分别选用。（2）型号中-K表示使用铠装内芯元件。（3）l_1为耐磨合金保护管的长度，由插入炉膛的长度而定，通常 l_1 = 插入炉膛深度+200mm。常规供货长度为：350mm。（4）固定螺栓和法兰规格参见安装图。

Note: (1) The mark □ in the model stands for the outer diameter of protection tube. Customers are free to choose ϕ18, ϕ22, ϕ25 or ϕ32. (2) K in the model stands for the sheathed inner core elements. (l_1) is the length of wear-resistance alloy protection tube, which is usually depended on the length of insertion furnace. l_1 = length of insertion furnace + 200mm. The normal length provided is 350mm. (4) for the specification of fixed screw bolt and flange.

Nanpu meter factory 南浦仪表厂 021-33040697

低温耐磨型热电偶、热电阻Low temperature abrasion-proof thermocouple and thermal resistance

本系列推出喷涂型和耐磨合金型两种。适用于温度稍低如煤磨用、有物料磨损的场所。喷涂型价格便宜，低温耐磨性能良好。耐磨合金型寿命长，成本稍高。

This series includes spraying and abrasion-proof resistant alloy types which can be used to the places with a low temperature, such as coal and material abrasion. The spraying type is low in price and abrasive in low temperature. The abrasion-proof resistant alloy type has a long lifetime but a higher price.

型 号 Model	分度号 Graduation Mark	测量范围(℃) Measuring Range(℃)	公称压力（MPa）Nominal pressure（MPa）	保护管规格（mm）Specification of protection tube（mm） d	L	图示 Diagrammatic view
WRN-230N-P WRN_2-230N-K-P	K	0~400	10			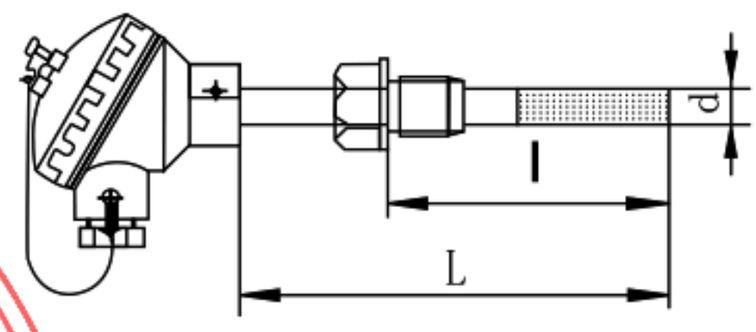 固定螺栓式fixing device
WRE-230N-P WRE_2-230N-K-P	E					
WZP-230N-P WZP_2-230N-K-P	Pt100					
WRN-330N-P WRN_2-330N-K-P	K	0~400	常压	ϕ16	100 150 200 250 300 350 400 450 500 550 750 900 1000 1250 1500 2000	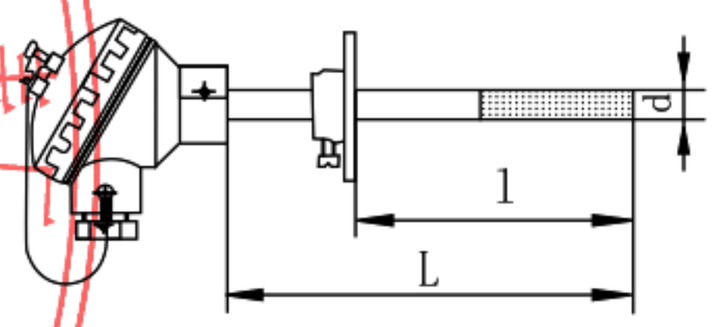 活动法兰式 Movable flamge type
WRE-330N-P WRE_2-330N-K-P	E					
WZP-330N-P WZP_2-330N-K-P	Pt100					
WRN-430N-P WRN_2-430N-K-P	K	0~400	2.5			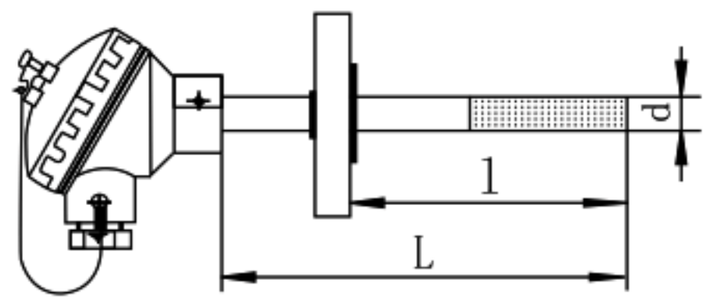 固定法兰式 Fixed flange type
WRE-430N-P WRE_2-430N-K-P	E					
WZP-430N-P WZP_2-430N-K-P	Pt100					
WRN-43□N-H WRN_2-43□N-K-H	K	0~400	2.5	ϕ18 ϕ20 ϕ22 ϕ25		
WRE-43□N-H WRE_2-43□N-K	E					
WZP-43□N-H WZP_2-43□N-K-H	Pt100					

注：（1）型号K表示使用铠装内芯元件，-P表示耐磨喷涂，耐磨长度一般为500mm，若需加长请订货时说明。-H表示硬质合金，耐磨长度通常为400mm，特殊规格需协议订货。（2）型号中□表示保护管的外径。（3）固定螺栓和法兰规格参见安装图。

Note: (1) Y in the model stands for the sheathed inner core elements, P stands for abrasive spraying with a normal length of 500mm. If need add, please indicate in the order. H in the model stands for hard alloy with a normal length of 400mm. If need add, please indicate in the order. (2) The mark □ in the model stands for the outer diameter of protection tube.
for the specification of fixed bolt and flange.

上海南浦仪表厂 Shanghai nanpu meter factory 021-33040697

金属冶炼、建材窑炉测温用热电偶Temperature thermocouple used for metal refining or Kiln construction

在钢铁、冶金、水泥行业，除在一般环境中使用通用型热电偶、热电阻外，在一些特殊环境、特殊介质中，必须使用特制的专用测温热电偶，本系列产品为常用的，实际应用效果较好的热电偶。

In the industry, such as steel, metallurgy and cement, general thermocouple and thermal resistance are available. However, under some special environment and in some special mediums, the special designed temperature thermocouple shall be used. The products of this series are frequently used thermocouples with a perfectly practical application effect.

电解铝槽测温用热电偶Electrolytic aluminum tank temperature thermocouple

手柄式铠装热电偶与便携式数字测温仪配套测量电解铝槽中的温度，使用方便灵活、反应迅速。针对电解铝槽内温度高，介质腐蚀性强等特点，我公司除可提供多种外径、不同式样手柄的普通型热电偶外，还可提供复合型铠装热电偶，有效地延长了使用期限，在电解铝行业已得到了普遍认可和广泛应用。

It is used to measure the temperature of the electrolytic aluminum tank with handle sheathed thermocouple and portable digital thermometer, which is convenient, flexible and fast responsive. Considering the high temperature and strong corrosive medium in the tank, our company provides not only various normal thermocouples with different handle types but composite sheathed thermocouples, which have a longer lifetime and been approved and widely used by the electrolytic aluminum industry.

型 号 Model	分度号 Graduation Mark	测量范围(℃) Measuring Range(℃)	套 管 Tube 材质 Material	d(mm)	测量端形式 Shape of the measuring terminal
WRNK-187（2）	K	0~1000	1Cr18Ni9Ti	ϕ4 ϕ5 ϕ6	绝缘式 Insulator
WRNK-188（2）		0~1100	316（L）		接壳式 Shell-connecting type
WREK-187（2）	E	-40~600	1Cr18Ni9Ti		绝缘式 Insulator
WREK-188（2）					接壳式 Shell-connecting type

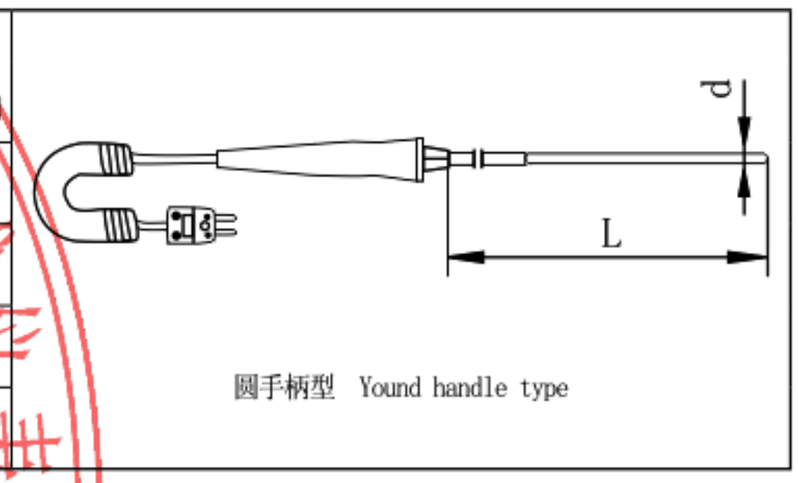

圆手柄型 Yound handle type

注：（1）订货时请注明型号，长度L和引线长度、手柄型式等。（2）常规供货为：L＝1米，引线长度1米。（3）括号（2）表示双层保护管热电偶。

Note: (1) Please indicate the model, length, lead length and handle type in order. (2) For normal order: L=1 meter and Lead length=1 meter. (3) The parenthesis (2) stands for double layer protection tube thermocouple.

回转窑烟道用热电偶Rotary kiln flue thermocouple

回转窑烟道温度高，有有害气体腐蚀。我公司使用特制的复合管和绝缘管，使用效果很好。

The special designed multiple unit tube and insulating tube can be effectively used to the rotary kiln flue with high temperature and harmful gas corrosion.

型号 Model	分度号 Graduation Mark	测量范围(℃) Measuring Range(℃)	规格 Specification d(mm)	材质 Material	L×l（mm）
WRN-332T	K	0~1200	ϕ16	高铝质 High Al2O3 刚玉质 Corundum	550×400 600×450 650×500 700×550 750×600 800×750 1000×850 1150×1000
WRN-333T		0~1300	ϕ20		
WRN-334T			ϕ25		

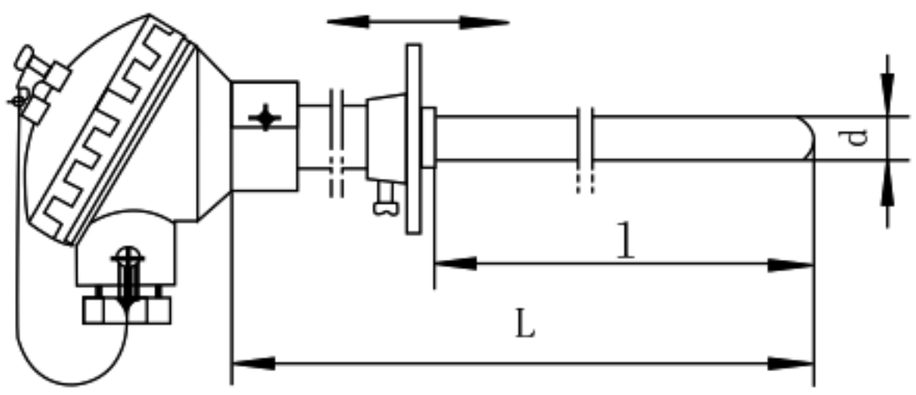

活动法兰式 Movable flamge type

注：（1）订货时请注明型号、保护管材质和长度（L×l）。（2）法兰规格参见安装图。

Note: (1) Please indicate the model, protection tube material and length (L×l). (2) See for the specification of flange

回转窑窑头用热电偶Rotary kiln hood thermocouple

型号 Model	分度号 Graduation Mark	测量范围(℃) Measuring Range(℃)	公称压力（MPa） Nominal pressure (MPa)	规格 Specification d(mm)	保护管材质 Protection tube material	L×l (mm)	图示 Diagrammatic view
WRN-236 WRN_2-236	K	0~850	10	Φ22	1Cr18Ni9Ti	250×100 300×150 350×200 400×250 450×300 500×350 550×400 600×450 650×500 700×550 750×600 800×750 1050×900 1150×1000 1400×1250 1650×1500 2150×2000	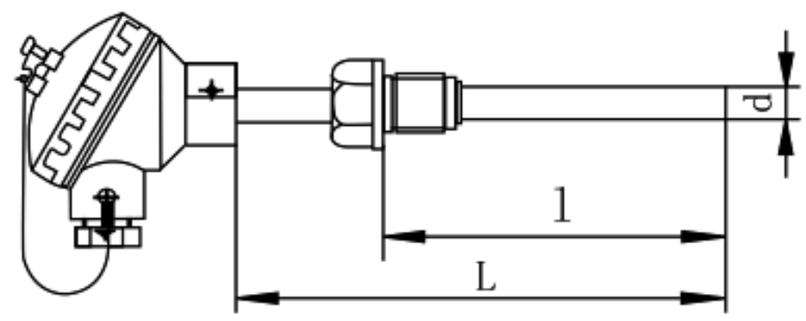 固定螺栓式 Fixed bolt type
WRN-236 WRN_2-236		0~1000			1Cr25Ni20		
WRN-436 WRN_2-436	K	0~850	2.5		1Cr18Ni9Ti		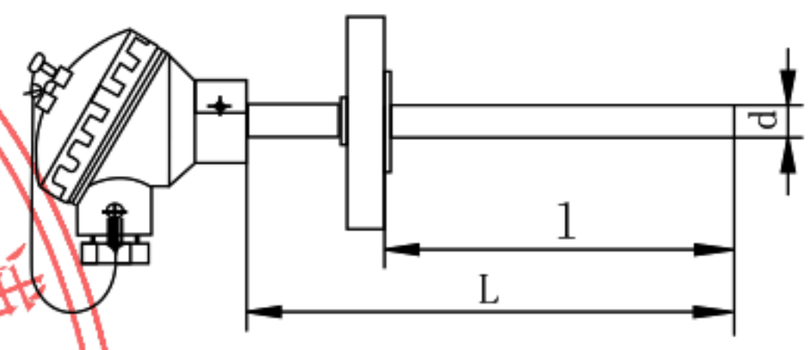 固定法兰式 Fixed flange type
WRN-436 WRN_2-436		0~1000			1Cr25Ni20		

注：（1）订货时请注明型号、保护管材质和长度（L×l）。
（2）固定螺栓和固定法兰规格参见安装图。

Note: (1) Please indicate the model, protection tube material and length (L×l).
(2) See page 91, Fig 147 and page 92, Fig 150 for the specification of fixed bolt and flange.

耐腐蚀热电偶、热电阻Corrosion resistant thermocouple

在热电偶、热电阻的保护管上喷涂或电镀某些防腐蚀材料，或直接使用耐腐蚀合金材料制造保护管，令其具有较强的耐酸、碱、盐等介质腐蚀能力。可适用于冶金、石油、化工、机械、染化、纺织、农药、环保等工业部门。

By spraying or electric plating some anticorrosive materials on the protection tube of thermocouple or directly manufacturing protection tube with anticorrosive materials, the corrosion resistant thermocouple can be applicable to the industrial segments, such as metallurgy, petroleum, chemical engineering, mechanics, variegate, textile, agricultural pesticides and environment protection.

聚四氟乙烯防腐层Anticorrosion of insulation of PTFE

采用热熔烧结加工工艺，将聚四氟乙烯（PTFE）的套管和螺栓（或法兰）均匀地套在不锈钢保护管的外层。聚四氟乙烯它具有优异的化学稳定性、耐磨性、耐蚀性、润滑性以及耐热性和耐寒性，聚四氟乙烯的磨擦系数最低，几乎不吸水，耐腐蚀性突出，可耐沸腾的盐酸、硫酸、硝酸及王水等腐蚀介质的腐蚀。

The sheathed tube and bolt (or flange) of PTFE is evenly cased on the outer layer of the stainless steel protection tube using hot sintering technology. PTFE has a series of fine characteristics such as chemical stability, wear resistance, lubricity, corrosion resistance, heat durability and cold resistance. PTFE has the minimum coefficient of friction, little water absorption, fine wear resistance and good corrosion proof properties to boiling hydrochloric acid, sulfuric acid, nitric acid and aqua regia.

型号与规格Model and specification

在装配式热电偶、热电阻产品型号后加尾注“F”，即是耐腐蚀型，再注明耐腐材料名称或代号，规格也与装配式产品相同只是增加了涂层或镀层厚度，测温范围也受涂层或镀层限制。

Add “F” immediately following the model of assembly type thermocouple and thermal resistance, which stands for corrosion proof type, and then the name or code of the corrosion material. Its specification is same to the assembly type but with additional coating layer or coating layer thickness and its temperature range is also controlled by the coating layer or plating coat.

Shanghai Nanpu Instrument Factory 021-33040697

固定螺栓式铂热电阻Fixed bolt platinum thermal resistance

名称 Name	型号 Model	分度号 Graduation Mark	热响应时间 τ0.5(s) Thermal response time τ0.5(s)	测量范围(℃) Measuring Range(℃)	
铂热电阻 Platinum thermal resistance	WZPF-230(PTFE)	Pt100	□120	-120~+200	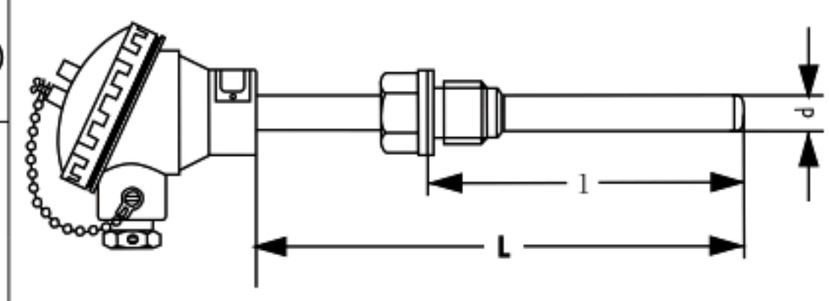
	WZP_2F-230(PTFE)				

注：（1）PTFE表示聚四氟乙烯防腐层。（2）保护管固定螺栓规格参见螺纹安装图。

Note (1) PTFE stands for the anticorrosive coating of ploytetrafluoroethylene. (2) See page 91, Fig 147 for the specification of the straight lined protection tube fixed bolt.

固定法兰式铂热电阻Fixed flange platinum thermal resistance

名称 Name	型号 Model	分度号 Graduation Mark	热响应时间 τ0.5(s) Thermal response time τ0.5(s)	测量范围(℃) Measuring Range(℃)	
铂热电阻 Platinum thermal resistance	WZPF-430(PTFE)	Pt100	□120	-120~+200	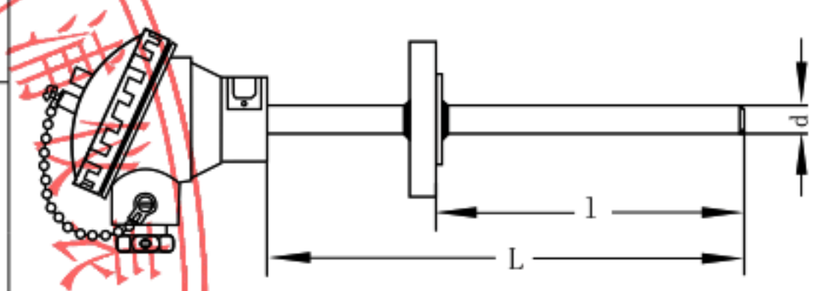
	WZP_2F-430(PTFE)				

注：（1）PTFE表示聚四氟乙烯防腐层。
（2）固定法兰型号后加“A”，为ANSI标准法兰。

Note: (1) PTFE stands for the anticorrosive coating of ploytetrafluoroethylene.
(2) Fixed flange model with “A” at the end shall be ANSI standard flange.

上海南浦仪表厂 Shanghai Nanpu Metal Instrument Factory 021-33040697

热电偶接线图Thermocouple wiring diagram

单支 Single

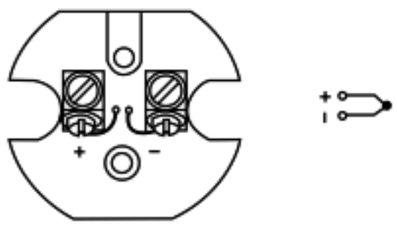

双支 Dual

叁支 Treble

热电阻接线图Thermal resistance wiring diagram

单支 Single

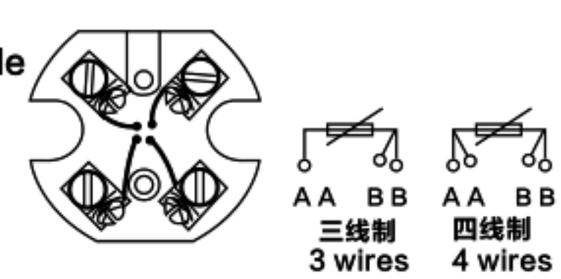

双支 Dual
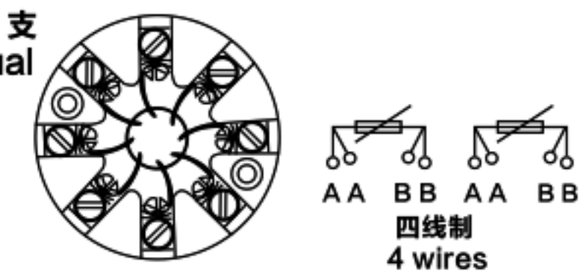
双支 Dual