视频开关OLED进口视频切换开关　智能化开关日本显示屏按钮开关说明书　OLED开关选型样本pdf资料
智能开关智能按钮开关OLED显示屏开关　播放开关映像设备开关音响开关　可编程开关OLED按钮开关OLED按键开关

Contents SmartSwitch™

NEW OLED Pushbutton E4
Switch with 64 x 48 Programmable Color Display
Video Capability; 180° Viewing Angle; High Contrast

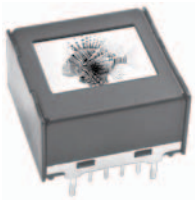

NEW OLED Display E7
52 x 36 Programmable Color Display
Video Capability; 180° Viewing Angle; High Contrast

NEW OLED Rocker E11
Switch with 96 x 64 Programmable Display
White Monochrome OLED Display; 180° Viewing Angle; IP64

NEW LCD 64 x 32 Pushbutton E17
Switch with Programmable Display
RGB 64 Colors; Long Life LCD; up to 4 Lines with 10 Characters Each

NEW LCD 64 x 32 Display E20
Programmable Display
RGB 64 Colors; Long Life LCD; up to 4 Lines with 10 Characters Each

NEW LCD 64 x 32 Compact Pushbutton E24
Switch with Programmable Display; 28% Smaller than Standard Size
RGB 64 Colors; Long Life LCD; up to 4 Lines with 10 Characters Each

进口OLED显示屏按钮开关价格查询　全国统一热线 4006-022-002　www.shuntu.net　shunto@126.com

视频开关OLED进口视频切换开关　智能化开关日本显示屏按钮开关说明书　OLED开关选型样本pdf资料
智能开关智能按钮开关OLED显示屏开关　播放开关映像设备开关音响开关　可编程开关OLED按钮开关OLED按键开关

Contents

LCD 36 x 24 Pushbutton E29
Switch with Programmable Display
Single, Bicolor or RGB Backlight; up to 3 Lines with 6 Characters Each

LCD 36 x 24 Display E36
Programmable Display
Single, Bicolor or RGB Backlight; up to 3 Lines with 6 Characters Each

LCD 36 x 24 Compact Pushbutton E42
Switch with Programmable Display; 28% Smaller than Standard Size
Single, Bicolor or RGB Backlight; up to 3 Lines with 6 Characters Each

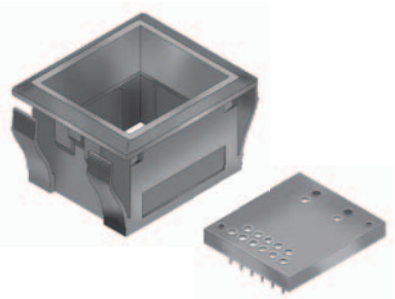

Accessories E47
Enhance Your Applications

Development Tools & Support

NKK provides numerous development tools to get any SmartSwitch project started easily. Please visit our web site or contact a sales representative.

进口OLED显示屏按钮开关价格查询　全国统一热线 4006-022-002　www.shuntu.net　shunto@126.com

视频开关OLED进口视频切换开关　智能化开关日本显示屏按钮开关说明书　OLED开关选型样本pdf资料
智能开关智能按钮开关OLED显示屏开关　播放开关映像设备开关音响开关　可编程开关OLED按钮开关OLED按键开关

DISTINCTIVE CHARACTERISTICS

- Organic LED technology
- Life 30,000 hours @ 100cd/m² (based on 40% pixels on) or 60,000 hours @ 50cd/m² (based on 40% pixels on)
- Power consumption only 3.8mA (30% less than previous product)
- Range of 65,536 colors in 16 bit mode, 256 colors in 8 bit mode
- Full viewing angle of 180°
- Exceptional contrast: 50 times greater than LCD products
- Four times more enhanced resolution
- High resolution provides sharp, clear images of very small characters
- Operated by commands and data supplied via serial communications (SPI)
- Distinct, long travel of 4.5mm (same as KP01 series pushbuttons)
- Dust tight construction
- Stylish, translucent black housing design

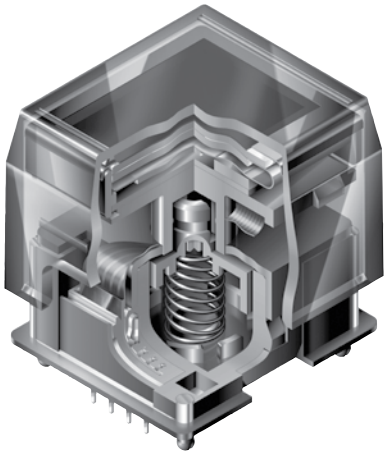

Viewing area: 15.5mm x 11.6mm (horizontal x vertical)

High reliability and long life of three million actuations minimum

High resolution of 64RGB x 48 pixels

Epoxy sealed straight PC terminals

Snap-in standoff for easy, secure mounting and alignment

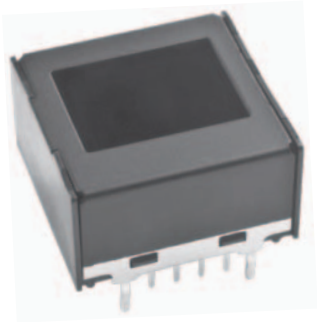

Viewing area: 12.9mm x 9.9mm (horizontal x vertical)

High resolution of 52RGB x 36 pixels

Bracket has crimped legs to ensure secure PC mounting and prevent dislodging during wave soldering

Actual Sizes

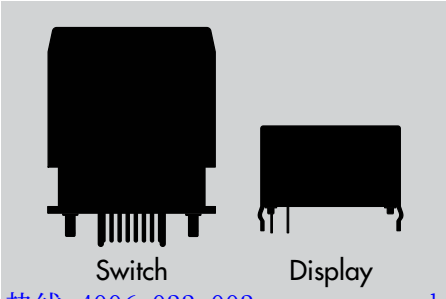

进口OLED显示屏按钮开关价格查询　全国统一热线 4006-022-002　www.shuntu.net　shunto@126.com

视频开关OLED进口视频切换开关　智能化开关日本显示屏按钮开关说明书　OLED开关选型样本pdf资料
智能开关智能按钮开关OLED显示屏开关　播放开关映像设备开关音响开关　可编程开关OLED按钮开关OLED按键开关

SWITCH PART NUMBER & DESCRIPTION

ATTENTION ELECTROSTATIC SENSITIVE DEVICES

Part Number	Switch Description	OLED	Pixel Format
ISC15ANP4	SPST, Momentary ON Gold Contacts Straight PC Terminals	Color OLED Display Module 65,536 Colors	64RGB x 48 Pixels Horizontal x Vertical

SWITCH SPECIFICATIONS

Circuit	SPST normally open
Contact Position	Leave actuator: ① – ② OFF Push actuator: ① – ② ON
Electrical Capacity (Resistive Load)	100mA @ 12V DC
Contact Resistance	200 milliohms maximum @ 20mV 10mA
Insulation Resistance	100 megohms minimum @ 100V DC
Dielectric Strength	125V AC for 1 minute minimum
Mechanical Endurance	3,000,000 operations minimum
Electrical Endurance	3,000,000 operations minimum
Operating Force	2.0 ± 0.5 Newtons
Total Travel	4.5mm (.177″)

OLED SPECIFICATIONS

Characteristics of Display

Display Device	Color OLED display module
Display Mode	Passive matrix
Viewing Area	15.5mm x 11.6mm (horizontal x vertical)
Pixel Format	64RGB x 48 pixels (horizontal x vertical)
Pixel Size	0.21mm x 0.20mm (horizontal x vertical)
Interface	Serial (SPI) interface
Number of Colors	65,536 Colors (16bit: R 5bit/G 6bit/B 5bit) or 256 Colors (8bit: R 2bit/G 3bit/B 3bit)
Operating Temperature Range	−20°C ~ +70°C (−4°F ~ +158°F)
Storage Temperature Range	−30°C ~ +80°C (−22°F ~ +176°F)
Operating Life (Display)	30,000 hours @ 100cd/m² (based on 40% pixels ON) 60,000 hours @ 50cd/m² (based on 40% pixels ON)

Absolute Maximum Ratings

Items	Symbols	Ratings
Supply Voltage for Logic/Interface	V_{DD}	−0.3V to +4.0V
Supply Voltage for Drive	V_{CC}	−0.0V to +19.0V
Input Voltage	V_I	−0.3V to V_{DD} +0.3V

Current Consumption

(Temperature at 25°C, V_{DD} = 2.8V, V_{CC} = 16.0V)

Items	Symbols	Min	Typical	Max
All-Pixels-On Mode *Drive System Power Current	I_{CC1}	—	3.8mA	4.6mA
All-Pixels-On Mode *Logic/IF System Power Current	I_{DD1}	—	0.16mA	0.19mA
Sleep Mode **Drive System Power Current	I_{CC2}	—	—	10μA
Sleep Mode **Logic/IF System Power Current	I_{DD2}	—	—	10μA

* All pixels shall be turned on with the maximum level gray scale
** All pixels shall be turned off (while chip is operating)

Recommended Operating Conditions

Items	Symbols	Minimum	Typical	Maximum
Supply Voltage for Logic/Interface	V_{DD}	2.4V	2.8V	3.5V
Supply Voltage for Drive	V_{CC}	15.0V	16.0V	17.0V
Input High Level Voltage	V_{IH}	0.8 x V_{DD}	—	—
Input Low Level Voltage	V_{IL}	—	—	0.2 x V_{DD}

Optical Characteristics (Temperature at 25°C, Initial Value: 87 x 0F)

Items		Min	Typical	Max	Unit	Remarks
Luminosity		75	100	125	cd/m²	White (All pixels on)
White Color Coordinate	(x)	0.26	0.30	0.34	—	
	(y)	0.32	0.37	0.42	—	
Red Color Coordinate	(x)	0.63	0.67	0.71	—	
	(y)	0.29	0.33	0.37	—	
Green Color Coordinate	(x)	0.19	0.23	0.27	—	
	(y)	0.61	0.65	0.69	—	
Blue Color Coordinate	(x)	0.10	0.14	0.18	—	
	(y)	0.14	0.20	0.26	—	
Contrast Ratio		100	—	—	—	

进口OLED显示屏按钮开关价格查询　全国统一热线 4006-022-002　www.shuntu.net　shunto@126.com

视频开关OLED进口视频切换开关　智能化开关日本显示屏按钮开关说明书　OLED开关选型样本pdf资料
智能开关智能按钮开关OLED显示屏开关　播放开关映像设备开关音响开关　可编程开关OLED按钮开关OLED按键开关

SWITCH BLOCK DIAGRAM & PIN CONFIGURATIONS

ISC15ANP4

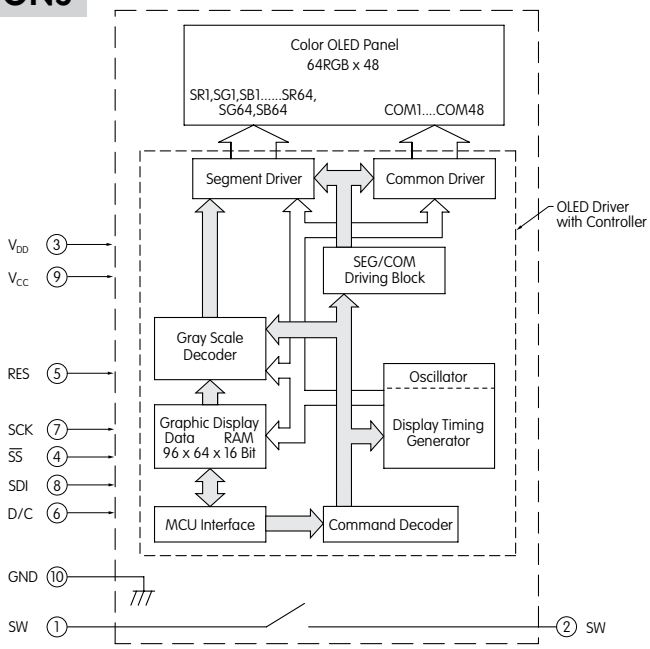

Pin No.	Symbol	Name	Function
1	SW	Terminal of Switch	Normally open
2	SW	Terminal of Switch	Normally open
3	V_{DD}	Power	Power source for logic circuit
4	$\overline{SS}$	Slave Select	Slave select for SPI. This line is active low.
5	RES	Reset	Reset signal input. When pin is low, initialization of chip is executed.
6	D/C	Data/Command	Data/Command Control. When pin is pulled low, data will be interpreted as Command; when pulled high, data will be interpreted as Data.
7	SCK	Serial Clock	Clock line for SPI that synchronizes command and data
8	SDI	Serial Data In	Data input line for SPI
9	V_{CC}	Power	Power source for drive circuit
10	GND	Ground	Connect to Ground

TYPICAL SWITCH DIMENSIONS

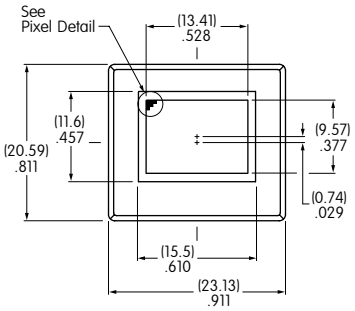

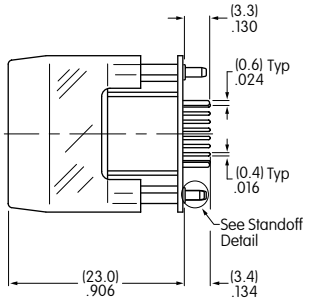

Terminal numbers are not on the switch.

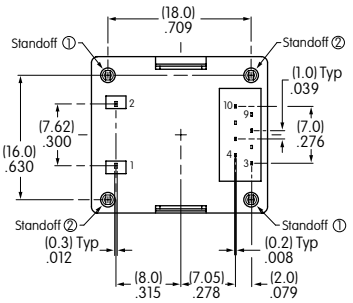

Pixel Detail

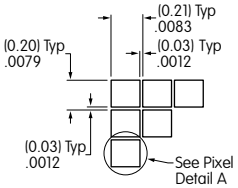

Pixel Detail A

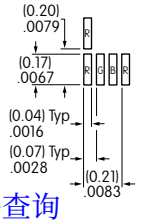

Standoff Detail

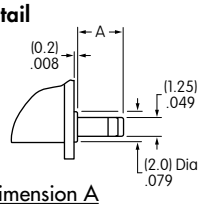

Dimension A

Standoff 1 = (2.7) .106　Standoff 2 = (2.3) .091

Footprint

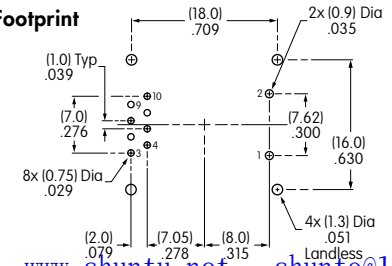

进口OLED显示屏按钮开关价格查询　全国统一热线 4006-022-002　www.shuntu.net　shunto@126.com

视频开关OLED进口视频切换开关　智能化开关日本显示屏按钮开关说明书　OLED开关选型样本pdf资料
智能开关智能按钮开关OLED显示屏开关　播放开关映像设备开关音响开关　可编程开关OLED按钮开关OLED按键开关

DISPLAY PART NUMBER & DESCRIPTION

ATTENTION ELECTROSTATIC SENSITIVE DEVICES

Part Number	Display Description	OLED	Pixel Format
ISC01P	Straight PC Terminals	Color OLED Display Module 65,536 Colors	52RGB x 36 Pixels Horizontal x Vertical

OLED SPECIFICATIONS

Characteristics of Display

Display Device	Color OLED display module
Display Mode	Passive matrix
Viewing Area	12.9mm x 9.9mm (horizontal x vertical)
Pixel Format	52RGB x 36 pixels (horizontal x vertical)
Pixel Size	0.21mm x 0.22mm (horizontal x vertical)
Interface	Serial (SPI) interface
Number of Colors	65,536 Colors (16bit: R 5bit/G 6bit/B 5bit) or 256 Colors (8bit: R 2bit/G 3bit/B 3bit)
Operating Temperature Range	−20°C ~ +70°C (−4°F ~ +158°F)
Storage Temperature Range	−30°C ~ +80°C (−22°F ~ +176°F)
Operating Life (Display)	30,000 hours @ 100cd/m² (based on 40% pixels ON) 60,000 hours @ 50cd/m² (based on 40% pixels ON)

Absolute Maximum Ratings

Items	Symbols	Ratings
Supply Voltage for Logic/Interface	V_{DD}	−0.3V to +4.0V
Supply Voltage for Drive	V_{CC}	0.0V to +19.0V
Input Voltage	V_I	−0.3V to V_{DD} +0.3V

Recommended Operating Conditions

Items	Symbols	Minimum	Typical	Maximum
Supply Voltage for Logic/Interface	V_{DD}	2.4V	2.8V	3.5V
Supply Voltage for Drive	V_{CC}	15.0V	16.0V	17.0V
Input High Level Voltage	V_{IH}	0.8 x V_{DD}	—	—
Input Low Level Voltage	V_{IL}	—	—	0.2 x V_{DD}

Current Consumption

(Temperature at 25°C, V_{DD} = 2.8V, V_{CC} = 16.0V)

Items	Symbols	Min	Typical	Max
All-Pixels-On Mode *Drive System Power Current	I_{CC1}	—	2.4mA	2.9mA
All-Pixels-On Mode *Logic/IF System Power Current	I_{DD1}	—	0.15mA	0.18mA
Sleep Mode **Drive System Power Current	I_{CC2}	—	—	10μA
Sleep Mode **Logic/IF System Power Current	I_{DD2}	—	—	10μA

*All pixels shall be turned on with the maximum level gray scale
**All pixels shall be turned off (while chip is operating)

Optical Characteristics (Temperature at 25°C, Initial Value: 87 x 0F)

Items		Min	Typical	Max	Unit	Remarks
Luminosity		75	100	125	cd/m²	White (All pixels on)
White Color Coordinate	(x)	0.25	0.29	0.33	—	
	(y)	0.31	0.36	0.41	—	
Red Color Coordinate	(x)	0.63	0.67	0.71	—	
	(y)	0.29	0.33	0.37	—	
Green Color Coordinate	(x)	0.19	0.23	0.27	—	
	(y)	0.60	0.64	0.68	—	
Blue Color Coordinate	(x)	0.10	0.14	0.18	—	
	(y)	0.14	0.20	0.26	—	
Contrast Ratio		100	—	—	—	

进口OLED显示屏按钮开关价格查询　全国统一热线 4006-022-002　www.shuntu.net　shunto@126.com

视频开关OLED进口视频切换开关　智能化开关日本显示屏按钮开关说明书　OLED开关选型样本pdf资料
智能开关智能按钮开关OLED显示屏开关　播放开关映像设备开关音响开关　可编程开关OLED按钮开关OLED按键开关

DISPLAY BLOCK DIAGRAM & PIN CONFIGURATIONS

ISC01P

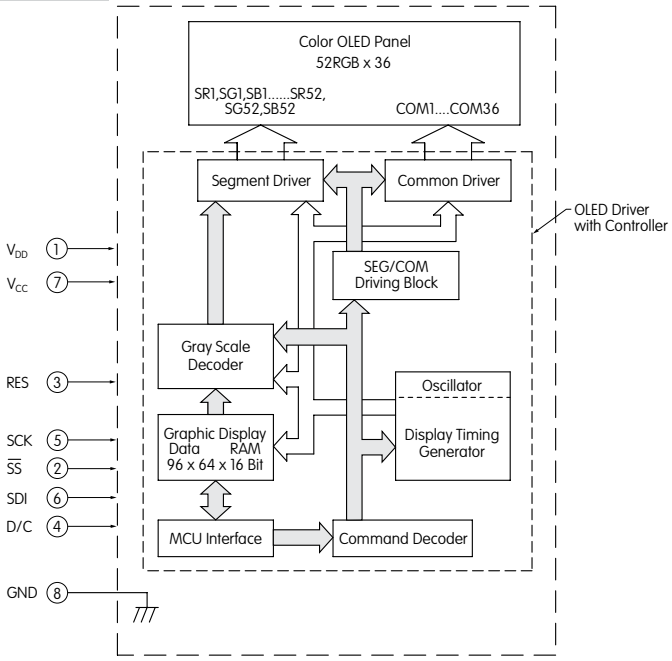

Pin No.	Symbol	Name	Function
1	V_{DD}	Power	Power source for logic circuit
2	$\overline{SS}$	Slave Select	Slave select for SPI. This line is active low.
3	RES	Reset	Reset signal input. When pin is low, initialization of chip is executed.
4	D/C	Data/Command	Data/Command Control. When pin is pulled low, data will be interpreted as Command; when pulled high, data will be interpreted as Data.
5	SCK	Serial Clock	Clock line for SPI that synchronizes command and data
6	SDI	Serial Data In	Data input line for SPI
7	V_{CC}	Power	Power source for drive circuit
8	GND	Ground	Connect to Ground

TYPICAL DISPLAY DIMENSIONS

Terminal numbers are not on the switch.

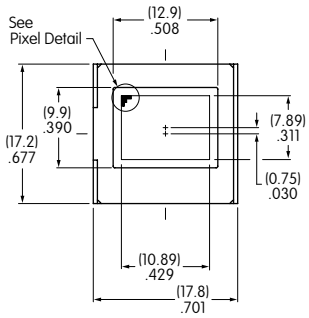

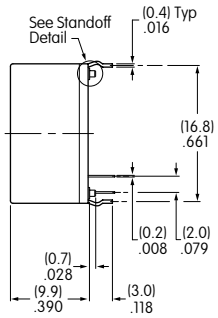

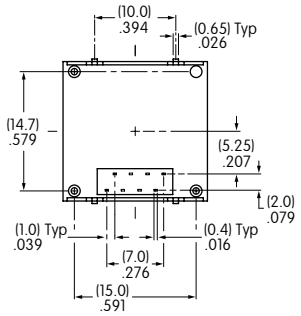

Pixel Detail

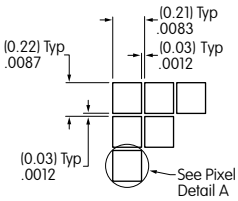

Pixel Detail A

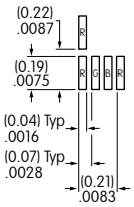

Standoff Detail

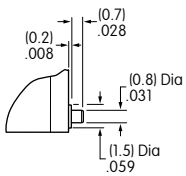

Footprint

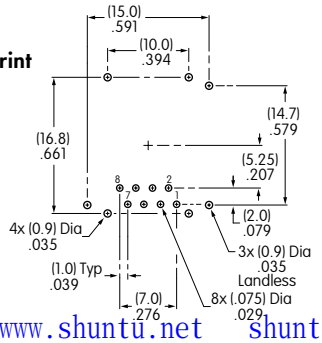

进口OLED显示屏按钮开关价格查询　全国统一热线 4006-022-002　www.shuntu.net　shunto@126.com

视频开关OLED进口视频切换开关　智能化开关日本显示屏按钮开关说明书　OLED开关选型样本pdf资料
智能开关智能按钮开关OLED显示屏开关　播放开关映像设备开关音响开关　可编程开关OLED按钮开关OLED按键开关

TIMING SPECIFICATIONS FOR SWITCH & DISPLAY

AC Characteristics (Temperature at 25°C), V_{DD} = 2.4V ~ 3.5V)

Items	Symbols	Minimum	Typical	Maximum
Clock Cycle Time	tcycle	150ns	—	—
D/C Setup Time	tAS	40ns	—	—
D/C Hold Time	tAH	40ns	—	—
$\overline{SS}$ Setup Time	tCSS	75ns	—	—
$\overline{SS}$ Hold Time	tCSH	60ns	—	—
Write Data Setup Time	tDSW	40ns	—	—
Write Data Hold Time	tDHW	40ns	—	—
SCK Low Time	tCLKL	75ns	—	—
SCK High Time	tCLKH	75ns	—	—
SCK Rise Time	tR	—	—	15ns
SCK Fall Time	tF	—	—	15ns

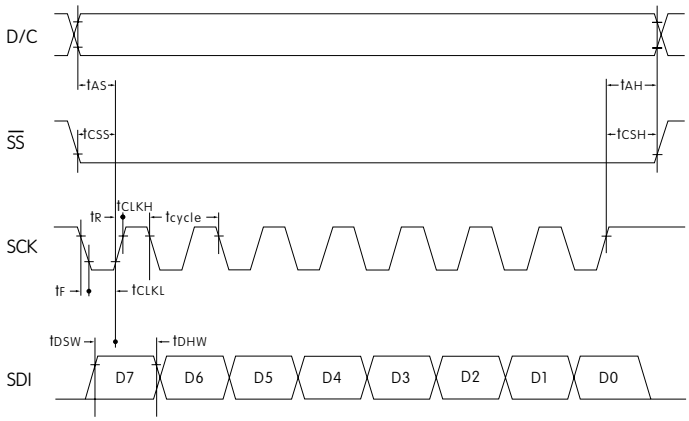

STATE TRANSITION

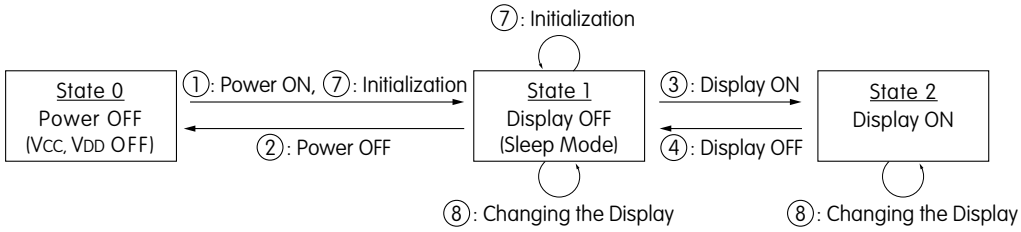

State Number	State	Display	Sleep	V_{CC}	V_{DD}	Changing the Display
0	Power OFF	OFF	—	OFF	OFF	Disable
1	Display OFF	OFF	ON	ON	ON	Enable
2	Display ON	ON	OFF	ON	ON	Enable

State Transition	Transition	Index
①	Power ON	Refer to "Power ON/OFF Sequence"
②	Power OFF	
③	Display ON	
④	Display OFF	
⑦	Initialization	Initialize Setting of Command/Data
⑧	Image Rewriting	Send Display Data
	Display Settings	Dimmer, Scroll, etc.

Power ON/OFF Sequence

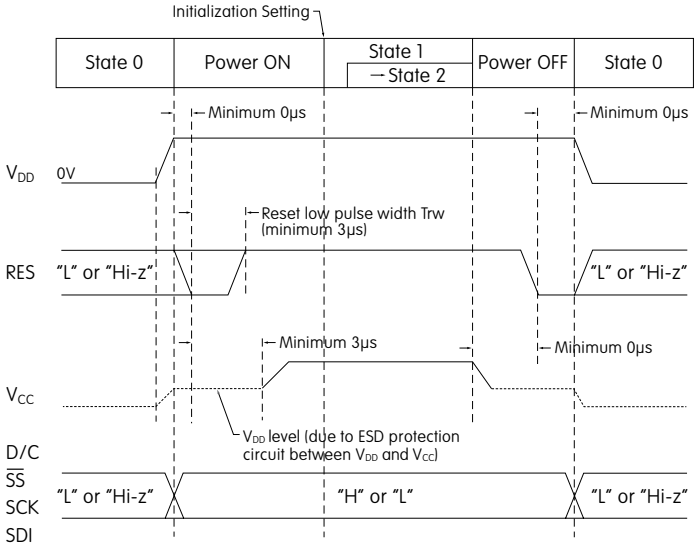

Note: Refer to Application Notes on web site.

进口OLED显示屏按钮开关价格查询　全国统一热线 4006-022-002　www.shuntu.net　shunto@126.com

视频开关OLED进口视频切换开关　智能化开关日本显示屏按钮开关说明书　OLED开关选型样本pdf资料
智能开关智能按钮开关OLED显示屏开关　播放开关映像设备开关音响开关　可编程开关OLED按钮开关OLED按键开关

PRECAUTIONS FOR HANDLING & STORAGE OF OLED DEVICES

ATTENTION
ELECTROSTATIC
SENSITIVE DEVICES

Handling

1. The IS Series OLED devices are electrostatic sensitive. To avoid damage to IC, do not touch terminals unless properly isolated from static electricity.
2. Signal input under conditions not recommended may cause damage to the OLED unit or deterioration of the display. Follow directions regarding supply sequences of power and signal voltages.
3. If the OLED panel is broken, avoid touching the contents. Wash off any contact to the skin or clothing.
4. Limit operating force to switch keytop to 100.0N maximum, as excessive pressure may damage the OLED.
5. For OLED display, it is necessary for bracket legs to be Grounded.
6. Recommended soldering time and temperature limits for OLED switch or display:
   Wave Soldering: see Profile A in Supplement section.
   Manual Soldering: see Profile A in Supplement section.
   Avoid temperatures exceeding 80°C at the OLED.
7. The IS series OLED devices are not process sealed.
8. Pixels acquire diminished brightness over time and use, and those most frequently habituated have greater reduction of brightness than those less used. To minimize this difference, operate OLED unit so that all pixels are used as consistently as possible.
9. For switch, clean cap surface with dry cloth. If further cleaning is needed, wipe with dampened cloth using neutral cleanser and dry with clean cloth. Do not use organic solvent. For display, avoid contact with any flux or detergent. If any liquids spill on display surface, immediately wipe with soft absorbent cloth.

Storage

1. Store in original container and away from direct sunlight.
2. Keep away from static electricity.
3. Avoid extreme temperatures, high humidity, gaseous substances, and all forms of chemical contamination.

进口OLED显示屏按钮开关价格查询　全国统一热线 4006-022-002　www.shuntu.net　shunto@126.com

视频开关OLED进口视频切换开关　智能化开关日本显示屏按钮开关说明书　OLED开关选型样本pdf资料
智能开关智能按钮开关OLED显示屏开关　播放开关映像设备开关音响开关　可编程开关OLED按钮开关OLED按键开关

DISTINCTIVE CHARACTERISTICS

- Organic LED technology in display rocker (patent pending)
- Multifunction programmable device: select with rocker, push for activation
- Replaces multiple switches and displays with one device in a small package
- Broad display aids in navigation, both forward and reverse and up and down, in structured menus
- Wide viewing angle of 180° and large 0.92″ display with exceptional contrast
- Conforms to IP64 of IEC60529 Standards on panel surface; dust tight construction of switch prevents entry of dust and improves contact reliability
- Commands and data supplied via serial communications protocol (SPI)
- Long life OLED with 52,000 hours at 30% illumination
- High reliability and long mechanical and electrical life of one million actuations minimum
- Stylish black housing design with matte finish complements any application

Monochrome OLED featuring sharp contrast and high resolution with 96 x 64 pixels

Panel mount with easy, snap-in installation

Short 14.6mm (.575″) behind-panel height for compact spaces

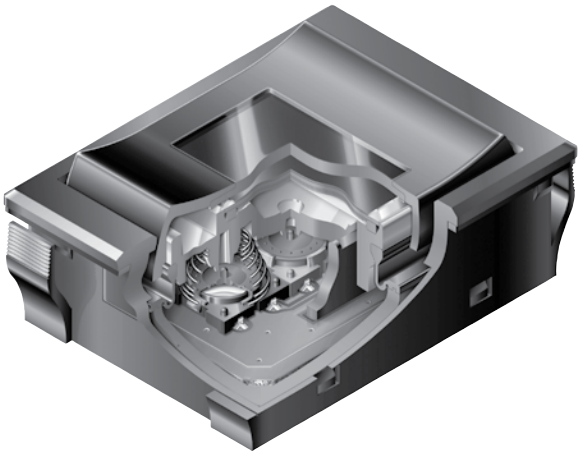

Actual Size

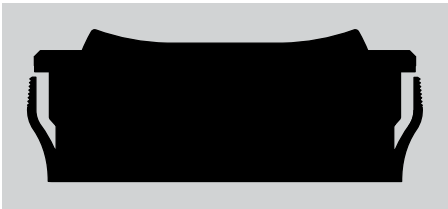

SMARTSWITCH PART NUMBER & DESCRIPTION

Part Number	Description
IS18WWC1W	**OLED Rocker Switch:** SP3T Switch Rocker (ON) (ON) (ON) Pushbutton Normally OFF

进口OLED显示屏按钮开关价格查询　全国统一热线 4006-022-002　www.shuntu.net　shunto@126.com

视频开关OLED进口视频切换开关　智能化开关日本显示屏按钮开关说明书　OLED开关选型样本pdf资料
智能开关智能按钮开关OLED显示屏开关　播放开关映像设备开关音响开关　可编程开关OLED按钮开关OLED按键开关

SWITCH SPECIFICATIONS

Circuit	Single Pole Three Throw (Momentary)					
Contact Position	Top		Center		Bottom	
	Normal	Down	Normal	Down	Normal	Down
	OFF	(ON) 9-12	OFF	(ON) 10-12	OFF	(ON) 11-12
Electrical Capacity (Resistive Load)	3VA maximum DC					
Contact Resistance	200 milliohms maximum					
Insulation Resistance	500 megohms minimum @ 250V DC					
Dielectric Strength	250V AC for 1 minute minimum					
Electrostatic Resisting Pressure	15kV minimum					
Mechanical Endurance	1,000,000 operations minimum					
Electrical Endurance	1,000,000 operations minimum					
Operating Force	5±2 Newtons at center of cap; 3.7±1.7 Newtons at top and bottom					
Total Travel	1.3±0.5mm (.051"±.020") at center of cap; 1.8±0.6mm (.71"±.024") at top and bottom					

OLED SPECIFICATIONS

Characteristics of Display

Display Device	Single color OLED display
Display Mode	Passive matrix
Pixel Format	96 x 64 pixels (horizontal x vertical)
Pixel Size	0.16mm x 0.177mm (horizontal x vertical)
Interface	Serial (SPI) interface
Color	White/Black (normally White)
Splash & Dust Proof	Conforms to IP64 of IEC60529 standards on panel surface
Operating Temperature Range	−20°C ~ +70°C (−4°F ~ +158°F)
Storage Temperature Range	−25°C ~ +80°C (−13°F ~ +176°F)
Operating Life Time (Display)	52,000 hours (30% brightness); 15,600 hours (100% brightness)

Absolute Maximum Ratings (Temperature at 25°C)

Items	Symbols	Ratings
Supply Voltage for Logic/Interface	VDDA	−0.3V to +3.6V
Supply Voltage for Drive	VAH	−0.3V to +18.0V
Input Voltage	Vin	−0.3V to VDDA +0.3V

Recommended Operating Conditions

Items	Symbols	Minimum	Typical	Maximum
Supply Voltage for Logic/Interface	VDDA	2.7V	2.8V	2.9V
Supply Voltage for Drive	VAH	14.5V	15.0V	15.5V
Input High Level Voltage	V_{IH}	0.75 x VDDA	—	VDDA
Input Low Level Voltage	V_{IL}	0.0	—	0.25V x VDDA

Current Consumption

(Temperature at 25°C, VDDA = 2.8V, VAH = 15.0V)

Items	Symbols	Min	Typical	Max
All-Pixels-On Mode *Drive System Power Current	I_{H1}	—	11.0mA	13.2mA
All-Pixels-On Mode *Logic/IF System Power Current	I_{DD1}	—	0.58mA	0.72mA
Sleep Mode **Drive System Power Current	I_{H2}	—	—	10μA
Sleep Mode **Logic/IF System Power Current	I_{DD2}	—	—	10μA

* All pixels shall be turned on with the maximum level gray scale
** All pixels shall be turned off (while chip is operating)

Optical Characteristics

(Temperature at 25°C, Initial Value: depends on initial setting)

Items		Minimum	Typical	Maximum
Brightness		75 cd/m²	100 cd/m²	125 cd/m²
Chromaticity	(x)	*1	0.310	*1
	(y)	*1	0.320	*1
Contrast		100	—	—

* Chromaticity range is the area of the ellipse. (See Chromaticity Diagram next page) The ellipse passes through points A, B, C and D and designates the center of each side of the quadrangle.

进口OLED显示屏按钮开关价格查询　全国统一热线 4006-022-002　www.shuntu.net　shunto@126.com

视频开关OLED进口视频切换开关　智能化开关日本显示屏按钮开关说明书　OLED开关选型样本pdf资料
智能开关智能按钮开关OLED显示屏开关　播放开关映像设备开关音响开关　可编程开关OLED按钮开关OLED按键开关

Chromaticity Diagram

Point	Chromaticity X	Chromaticity Y
A	0.3441	0.3663
B	0.2983	0.3384
C	0.2799	0.2881
D	0.3257	0.3160

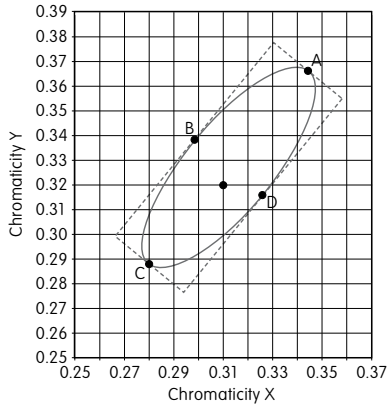

TIMING SPECIFICATIONS

AC Characteristics

(Temperature at −20°C ~ +70°C), VDDA = 2.8V, VAH = 16V

Items	Symbols	Minimum	Typical	Maximum
Clock Cycle Time	tcycle	100ns	—	—
A0 Setup Time	tSWDS	65ns	—	—
A0 Hold Time	tSWDH	35ns	—	—
$\overline{XCS}$ Setup Time	tCWS	65ns	—	—
$\overline{XCS}$ Hold Time	tCWH	95ns	—	—
High Level $\overline{XCS}$ Pulse Width	tCSBH	*10ns	—	—
Write Data Setup Time	tWDTS	10ns	—	—
Write Data Hold Time	tWDTH	20ns	—	—
SCL Low Time	tSCLL	45ns	—	—
SCL High Time	tSCLH	45ns	—	—
SCL Rise Time	tr	—	—	15ns
SCL Fall Time	tf	—	—	15ns

* Requires more than 100ns after resetting software

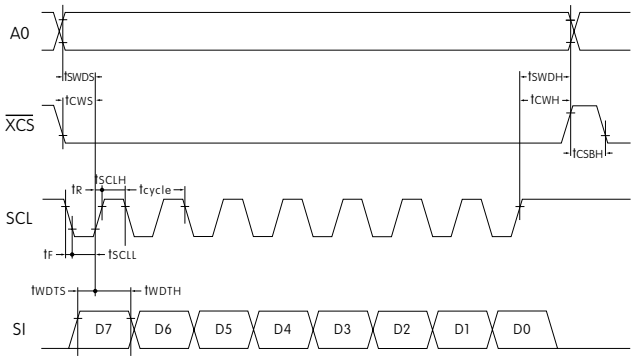

BLOCK DIAGRAM & PIN CONFIGURATIONS

IS18WWC1W

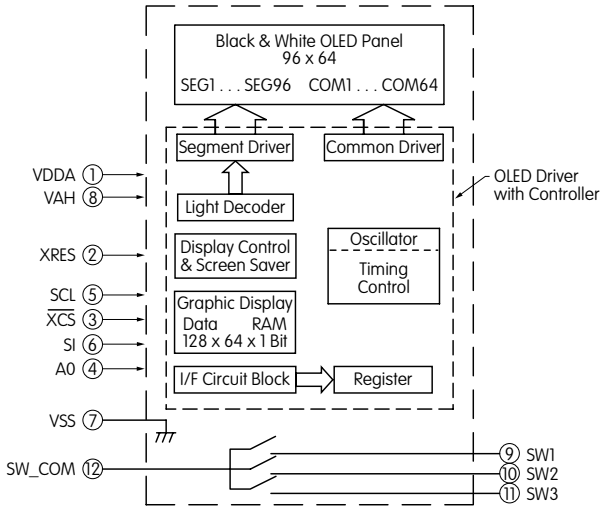

Pin No.	Symbol	Name	Function
①	VDDA	Logic Type Power Source	
②	XRES	Reset	Terminal to initialize IC built-in logic; initializes with low level
③	$\overline{XCS}$	Chip Select	Slave select for SPI. This line is active low.
④	A0	Address	Terminal to input control signals of command/parameter Set low at time of command input and high level at the time of parameter input.
⑤	SCL	Serial Clock	Read command/parameter at time of SCL signal standing up
⑥	SI	Serial Data Input	Terminal to input command/parameter by SPI
⑦	VSS	Ground	
⑧	VAH	Drive Type Power Source	
⑨	SW1	Switch Terminal 1	N/O
⑩	SW2	Switch Terminal 2	N/O
⑪	SW3	Switch Terminal 3	N/O
⑫	SW_COM	Switch Common Terminal	

进口OLED显示屏按钮开关价格查询　全国统一热线 4006-022-002　www.shuntu.net　shunto@126.com

视频开关OLED进口视频切换开关　智能化开关日本显示屏按钮开关说明书　OLED开关选型样本pdf资料
智能开关智能按钮开关OLED显示屏开关　播放开关映像设备开关音响开关　可编程开关OLED按钮开关OLED按键开关

SMARTSWITCH TYPICAL DIMENSIONS

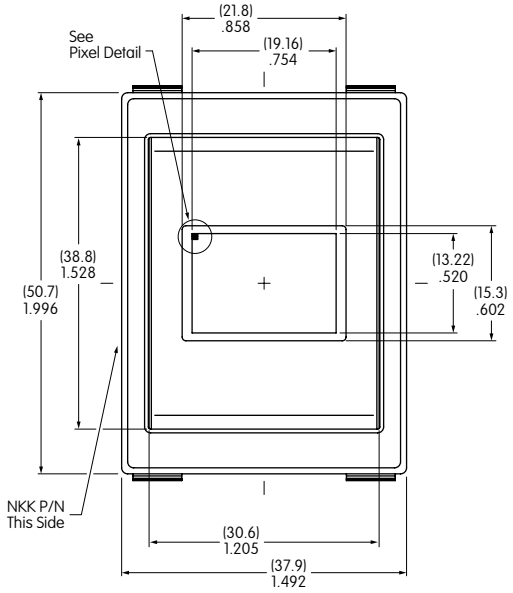

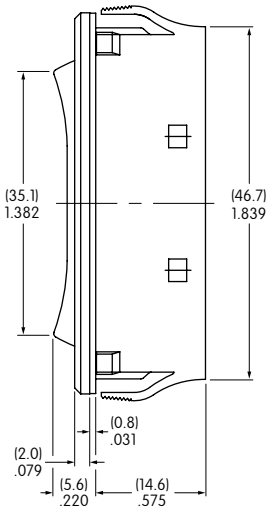

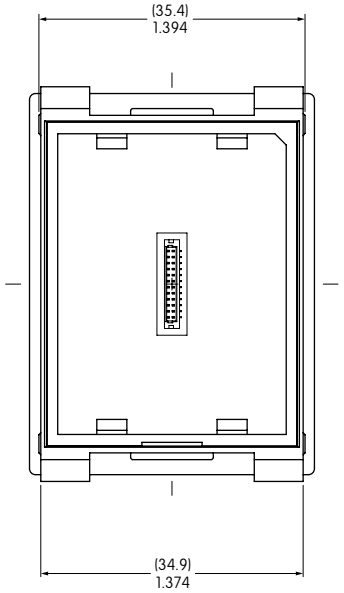

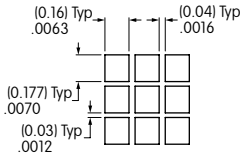

Pixel Detail

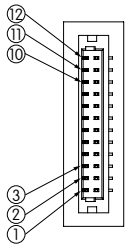

Terminal Connector Detail

Panel Thickness Range

.039 ~ .157"
(1.0mm ~ 4.0mm)

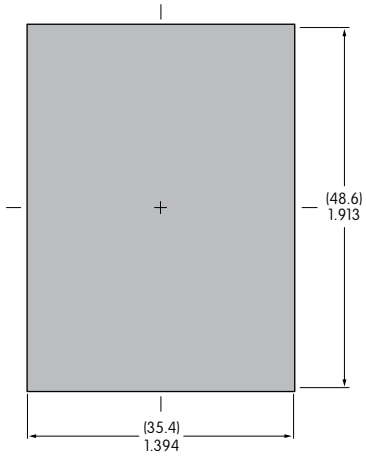

STATE TRANSITION

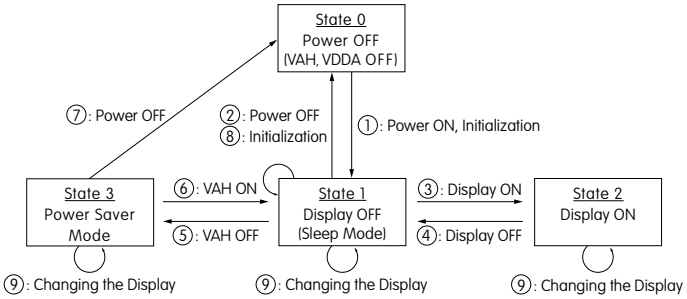

State Number	State	Display	Sleep	VAH	VDDA	Changing the Display
0	Power OFF	OFF	—	OFF	OFF	Disable
1	Display OFF	OFF	ON	ON	ON	Enable
2	Display ON	ON	OFF	ON	ON	Enable
3	Power Saver	OFF	ON	OFF	ON	Enable

Power ON/OFF Sequence

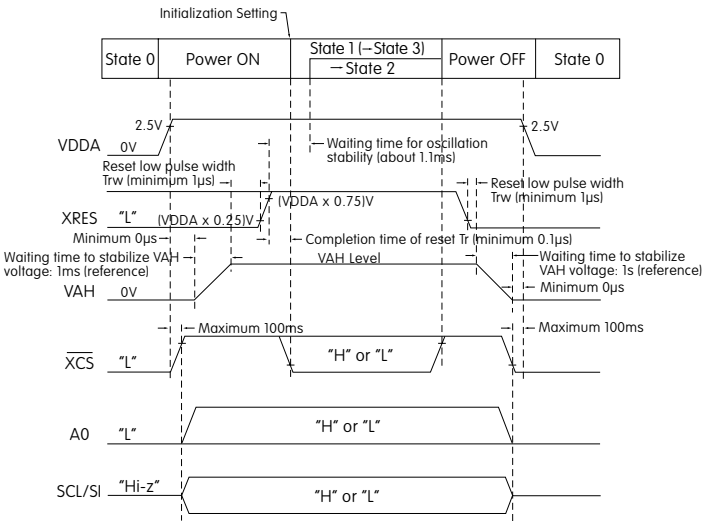

进口OLED显示屏按钮开关价格查询　全国统一热线 4006-022-002　www.shuntu.net　shunto@126.com

视频开关OLED进口视频切换开关　智能化开关日本显示屏按钮开关说明书　OLED开关选型样本pdf资料
智能开关智能按钮开关OLED显示屏开关　播放开关映像设备开关音响开关　可编程开关OLED按钮开关OLED按键开关

STATE TRANSITION (CONTINUED)

State Transition	Transition		Reference or Setting Procedure
①	Power ON		Refer to "Power ON/OFF Sequence" → Refer to "Initialization Setting"
②	Power OFF		Refer to "Power ON/OFF Sequence"
③	Display ON		Refer to "Display ON/OFF Sequence"
④	Display OFF		
⑤	VAH OFF		Wait until VAH becomes stable
⑥	VAH ON		
⑦	Power OFF		Refer to "Power ON/OFF Sequence"
⑧	Initialization		Refer to "Initialization Setting"
⑨	Display Change	Image Rewriting	96 x 64 Image Data Sending
		Display Settings	Dimmer/Screen Saver/Indication 180° Reversal

Display ON/OFF Sequence

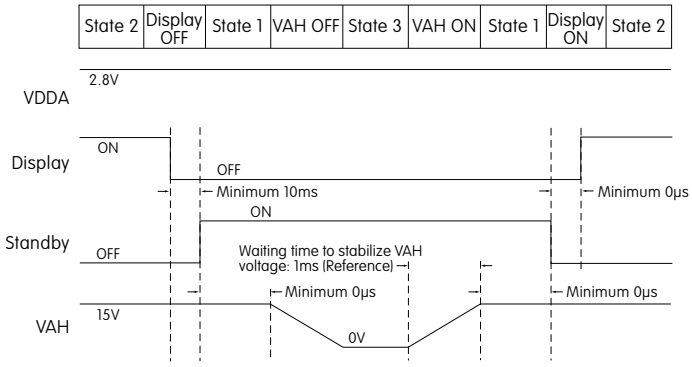

INITIALIZITION SETTING

Command Name	Command Address	Parameter (1 or 2Byte)	Remarks
Software Reset	01		
Dot Matrix Display ON/OFF	02	00	Note 1
Read/Write Operation Wetting	07	00	Note 1
Display Direction Set Command	09	00	Note 1
Reserved 1	10	03	Note 2
Reserved 2	12	63	Note 2
Reserved 3	13	00	Note 2
Dot Matrix Display Standby ON/OFF	14	00	
Reserved 4	16	00	Note 2
Reserved 5	17	00	Notes 1 & 2
Reserved 6	18	09	Note 2
Reserved 7	1A	04	Notes 1 & 2
Reserved 8	1C	00	Notes 1 & 2
Graphic Memory Writing Direction	1D	00	Note 1
Setting Column Output Range	30	005F	Note 1
Setting Row Output Range	32	003F	Note 1
X Axis Reading/Writing Start Point	34	00	Note 1
X Axis Reading/Writing End Point	35	0B	Note 1
Y Axis Reading/WritingStart Point	36	00	Note 1
Y Axis Reading/Writing End Point	37	3F	Note 1

Notes: 1. Same as default value
2. Do not change setting value

Command Name	Command Address	Parameter (1 or 2Byte)	Remarks
X Axis Reading Start Address	38	00	Note 1
Y Axis Reading Start Address	39	00	Note 1
Reserved 9	48	03	Note 2
Screen Saver Event Timer Setting Command	C3	00	Note 1
Screen Saver Event Timer Setting Command	C4	00	Note 1
One Time, Repeat or Direction Setting for Screen Saver	CC	00	Note 1
Start/Stop Setting for Screen Saver	CD	00	Note 1
System Clock Division Ratio Setting	D0	80	Note 2
Setting the STBY Pin	D2	00	Notes 1 & 2
DACA Setting	D4	00	Note 2
DACB Setting	D5	00	Note 2
DACC Setting	D6	00	Note 2
DACD Setting	D7	00	Note 2
Reserved 10	D9	00	Notes 1 & 2
Dimmer Setting	DB	0F	Note 1
Reserved 11	DD	88	Note 2
Image Writing	08	Image data	

Notes: 1. Same as default value
2. Do not change setting value

进口OLED显示屏按钮开关价格查询　全国统一热线 4006-022-002　www.shuntu.net　shunto@126.com

视频开关OLED进口视频切换开关　智能化开关日本显示屏按钮开关说明书　OLED开关选型样本pdf资料
智能开关智能按钮开关OLED显示屏开关　播放开关映像设备开关音响开关　可编程开关OLED按钮开关OLED按键开关

ACCESSORIES

AT715 Cable for Connection

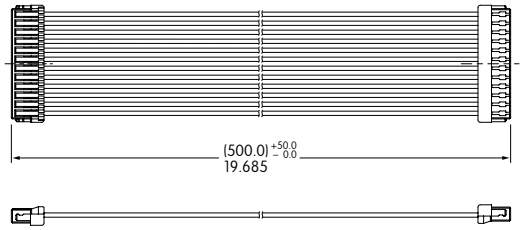

PRECAUTIONS FOR HANDLING & STORAGE

Handling

1. OLED devices are electrostatic sensitive.
2. Signal input under conditions not recommended may cause damage to the OLED unit or deterioration of the display. Follow directions regarding supply sequences of power and signal voltages.
3. If the OLED panel is broken, avoid touching the contents. Wash off in case of contact to the skin or clothing.
4. Limit operating force to 100.0N maximum, as excessive pressure may damage the display.
5. Under certain actuation conditions, one side of the rocker and the center switch can both send actuation signals.
6. Pixels acquire diminished brightness over time and use, and those most frequently habituated have greater reduction of brightness than those less used. To minimize this difference, operate OLED unit so that all pixels are used as consistently as possible.
7. Clean actuator surface with dry cloth. If further cleaning is needed, wipe with dampened cloth using neutral cleanser and dry with clean cloth. Do not use organic solvent.

Storage

1. Store in original container and away from direct sunlight.
2. Keep away from static electricity.
3. Avoid extreme temperatures, high humidity, gaseous substances, and all forms of chemical contamination.

Panel Mounting

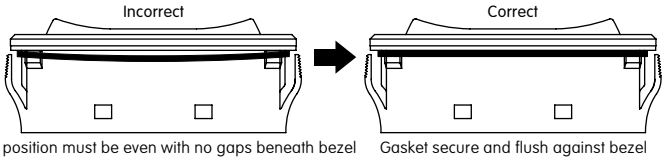

- Before snapping a switch into the panel, align the gasket evenly under the bezel of the switch.
- When mounting into a panel, apply equal pressure to sides of bezel and insert parallel to the panel.
- After mounting, be sure there are no gaps between switch and panel. Lightly push into panel.

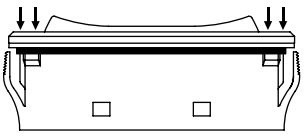

- After installing into panel, do not apply excessive force.
- After panel installation and wiring is completed, do not apply force horizontally or vertically from behind panel.
- Behind the panel, cut area should be squared. If front of panel is painted, do not allow any paint to collect in corners of cutout to prevent level mounting.

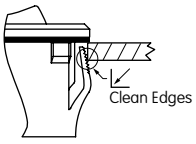

- Avoid reinstalling a switch once it has been mounted into panel. This may cause deterioration of panel sealability.

进口OLED显示屏按钮开关价格查询　全国统一热线 4006-022-002　www.shuntu.net　shunto@126.com

视频开关OLED进口视频切换开关　智能化开关日本显示屏按钮开关说明书　OLED开关选型样本pdf资料
智能开关智能按钮开关OLED显示屏开关　播放开关映像设备开关音响开关　可编程开关OLED按钮开关OLED按键开关

LCD 64 x 32 Pushbutton & Display

SmartSwitch™

DISTINCTIVE CHARACTERISTICS

- High resolution of 64 x 32 pixels
- 64 colors of backlighting can be controlled dynamically
- Pushbutton switch or display with LCD, RGB LED backlighting
- General brightness of backlight is dynamically controlled in eight steps from dark to bright
- Operated by commands and data supplied via serial communications (SPI)
- Can display as many as four lines of text with ten characters each
- Incorporates bitmap display function
- Programmable display graphics for alphanumeric characters and animated sequences
- Dual image VRAM for quick change of displayed images
- Distinct, long travel of 4.5mm (same as KP01 Series)
- Low energy consumption
- Dust tight construction

Viewing area: 15.0mm x 10.8mm (horizontal x vertical)

High reliability and long life of three million actuations minimum

Epoxy sealed straight PC terminals

Snap-in standoff for easy, secure mounting and alignment

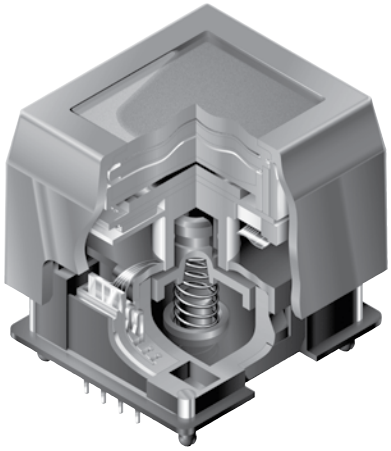

Viewing area: 13.9mm x 10.6mm (horizontal x vertical)

Bracket has crimped legs to ensure secure PC mounting and prevent dislodging during wave soldering

Actual Sizes

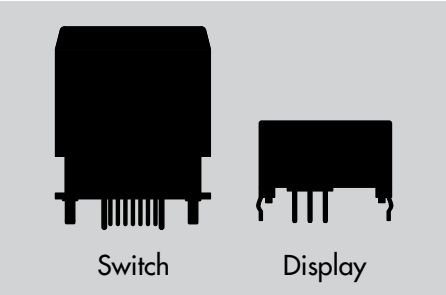

进口OLED显示屏按钮开关价格查询　全国统一热线 4006-022-002　www.shuntu.net　shunto@126.com

视频开关OLED进口视频切换开关　智能化开关日本显示屏按钮开关说明书　OLED开关选型样本pdf资料
智能开关智能按钮开关OLED显示屏开关　播放开关映像设备开关音响开关　可编程开关OLED按钮开关OLED按键开关

SWITCH PART NUMBER & DESCRIPTION

Part Number	Switch Description	LCD Mode	LED Color
IS15DBFP4RGB	SPST Momentary ON Gold Contacts Straight PC Terminals	Black & White FSTN Positive	Red/Green/Blue

SWITCH SPECIFICATIONS

Circuit	SPST normally open
Electrical Capacity (Resistive Load)	100mA @ 12V DC
Contact Resistance	200 milliohms maximum @ 20mV 10mA
Insulation Resistance	100 megohms minimum @ 100V DC
Dielectric Strength	125V AC for 1 minute minimum
Mechanical Endurance	3,000,000 operations minimum
Electrical Endurance	3,000,000 operations minimum
Operating Force	2.0 ± 0.5 Newtons
Total Travel	4.5mm (.177″)

LCD SPECIFICATIONS

Characteristics of Display

Display Operation Mode	FSTN positive; background colors, black & white
Display Condition	Transflective with built-in LED backlight
Viewing Angle Direction	6 o'clock
Viewing Area	15.0mm x 10.8mm (horizontal x vertical)
Pixel Format	64 x 32 pixels (horizontal x vertical)
Pixel Size	0.20mm x 0.27mm (horizontal x vertical)
***Operating Temperature Range**	−15°C ~ +50°C (+5°F ~ +122°F)
Storage Temperature Range	−20°C ~ +60°C (−4°F ~ +140°F)
Backlight LED	**RGB:** red/green/blue

* In a low temperature environment (below 0°C), speed and contrast decrease when image changes. The non-indicator dot may become dense in a high temperature environment (about +50°C).

Absolute Maximum Ratings (Temperature at 25°C)

Items	Symbols	Ratings
Supply Voltage	V_{DD}	−0.3V to +7.0V
Input Voltage	V_I	−0.3V to V_{DD} +0.3V
Output Voltage	V_O	−0.3V to V_{DD} +0.3V

Optical Characteristics (Temperature at 25°C)

Items		Symbols	Min	Typical	Max
Contrast Ratio		Cr	—	3.0	—
Viewing Angle (Cr ≥ 1.1)	Up & Down	θ	—	90°	—
	Right & Left	ϕ	—	90°	—

Recommended Operating Conditions (Temperature at 25°C)

Items	Symbols	Minimum	Typical	Maximum
Supply Voltage	V_{DD}	4.9V	5.0V	5.1V
High Level Input Voltage	V_{IH}	0.8 V_{DD}	—	—
Low Level Input Voltage	V_{IL}	—	—	0.2V_{DD}
SPI Clock Frequency	f_{SCK}	—	—	8MHz
Current Consumption	I_{DD}	** 10mA	—	*** 50mA

** 10mA: Backlighting LED is off
*** 50mA: Backlighting LEDs (Red, Green, Blue) are maximum brightness

进口OLED显示屏按钮开关价格查询　全国统一热线 4006-022-002　www.shuntu.net　shunto@126.com

视频开关OLED进口视频切换开关　智能化开关日本显示屏按钮开关说明书　OLED开关选型样本pdf资料
智能开关智能按钮开关OLED显示屏开关　播放开关映像设备开关音响开关　可编程开关OLED按钮开关OLED按键开关

SWITCH BLOCK DIAGRAM & PIN CONFIGURATIONS

IS15DBFP4RGB
RGB LED and
Black and White LCD Mode

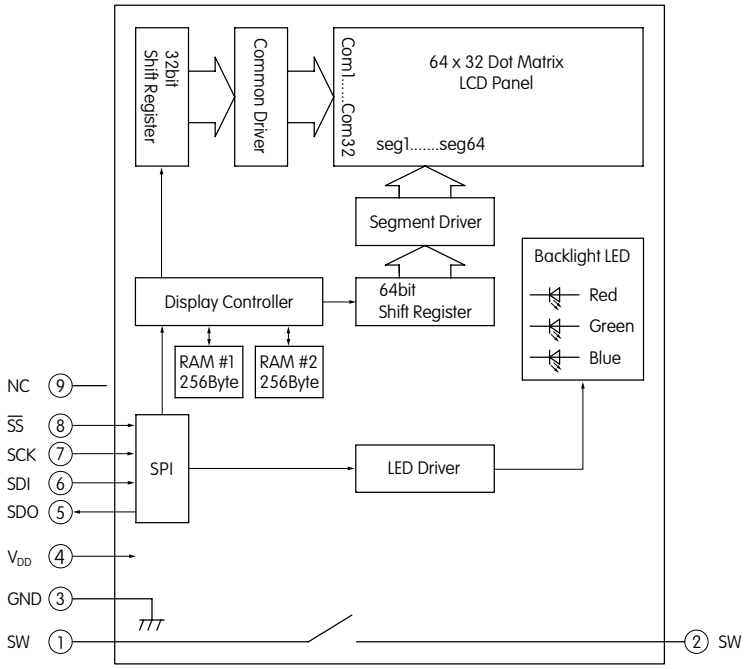

Pin No.	Symbol	Name	Function
1	SW	Terminal of Switch	Normally open
2	SW	Terminal of Switch	Normally open
3	GND	Ground	
4	V_{DD}	Power	Power source for logic circuit and LCD
5	SDO	Data Out	Data output line for SPI
6	SDI	Data In	Data input line for SPI
7	SCK	Serial Clock	Clock line for SPI that synchronizes commands and data
8	$\overline{SS}$	Slave Select	Chip select for SPI; line is active low
9	NC	None	No connection

TYPICAL SWITCH DIMENSIONS

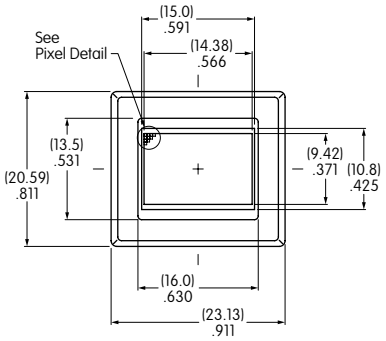

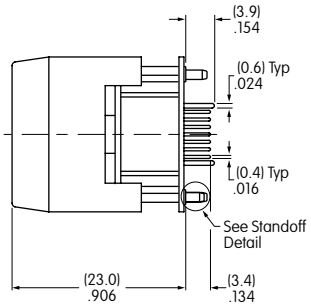

Terminal numbers are not on the switch.

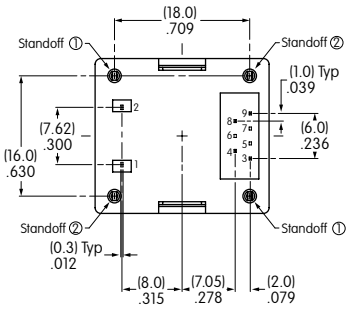

Pixel Detail

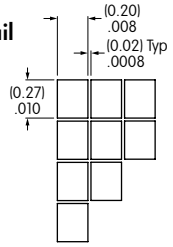

Standoff Detail

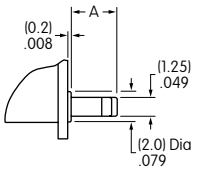

Dimension A

Standoff 1 = (2.7) .106　Standoff 2 = (2.3) .091

Footprint

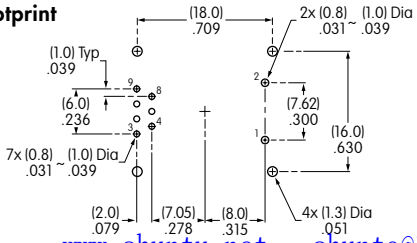

进口OLED显示屏按钮开关价格查询　全国统一热线 4006-022-002　www.shuntu.net　shunto@126.com

视频开关OLED进口视频切换开关　智能化开关日本显示屏按钮开关说明书　OLED开关选型样本pdf资料
智能开关智能按钮开关OLED显示屏开关　播放开关映像设备开关音响开关　可编程开关OLED按钮开关OLED按键开关

DISPLAY PART NUMBER & DESCRIPTION

Part Number	Terminals	LCD Mode	LED Color
IS01DBFRGB	Straight PC	Black & White FSTN Positive	Red/Green/Blue

LCD SPECIFICATIONS

Characteristics of Display

Display Operation Mode	FSTN positive; background colors, black & white
Display Condition	Transflective with built-in LED backlight
Viewing Angle Direction	6 o'clock
Viewing Area	13.9mm x 10.6mm (horizontal x vertical)
Pixel Format	64 x 32 pixels (horizontal x vertical)
Pixel Size	0.18mm x 0.24mm (horizontal x vertical)
***Operating Temperature Range**	−15°C ~ +50°C (+5°F ~ +122°F)
Storage Temperature Range	−20°C ~ +60°C (−4°F ~ +140°F)
Backlight LED	**RGB:** red/green/blue

* In a low temperature environment (below 0°C), speed and contrast decrease when image changes. The non-indicator dot may become dense in a high temperature environment (about +50°C).

Absolute Maximum Ratings (Temperature at 25°C)

Items	Symbols	Ratings
Supply Voltage	V_{DD}	−0.3V to +7.0V
Input Voltage	V_I	−0.3V to V_{DD} +0.3V
Output Voltage	V_O	−0.3V to V_{DD} +0.3V

Recommended Operating Conditions (Temperature at 25°C)

Items	Symbols	Minimum	Typical	Maximum
Supply Voltage	V_{DD}	4.9V	5.0V	5.1V
High Level Input Voltage	V_{IH}	0.8 V_{DD}	—	—
Low Level Input Voltage	V_{IL}	—	—	0.2V_{DD}
SPI Clock Frequency	f_{SCK}	—	—	8MHz
Current Consumption	I_{DD}	** 10mA	—	*** 50mA

** 10mA: Backlighting LED is off
*** 50mA: Backlighting LEDs (Red, Green, Blue) are maximum brightness

Optical Characteristics (Temperature at 25°C)

Items		Symbols	Min	Typical	Max
Contrast Ratio		Cr	—	3.0	—
Viewing Angle (Cr ≥ 1.1)	Up & Down	θ	—	90°	—
	Right & Left	ϕ	—	90°	—

进口OLED显示屏按钮开关价格查询　全国统一热线 4006-022-002　www.shuntu.net　shunto@126.com

视频开关OLED进口视频切换开关　智能化开关日本显示屏按钮开关说明书　OLED开关选型样本pdf资料
智能开关智能按钮开关OLED显示屏开关　播放开关映像设备开关音响开关　可编程开关OLED按钮开关OLED按键开关

DISPLAY BLOCK DIAGRAM & PIN CONFIGURATIONS

IS01DBFRGB
RGB LED and
Black and White LCD Mode

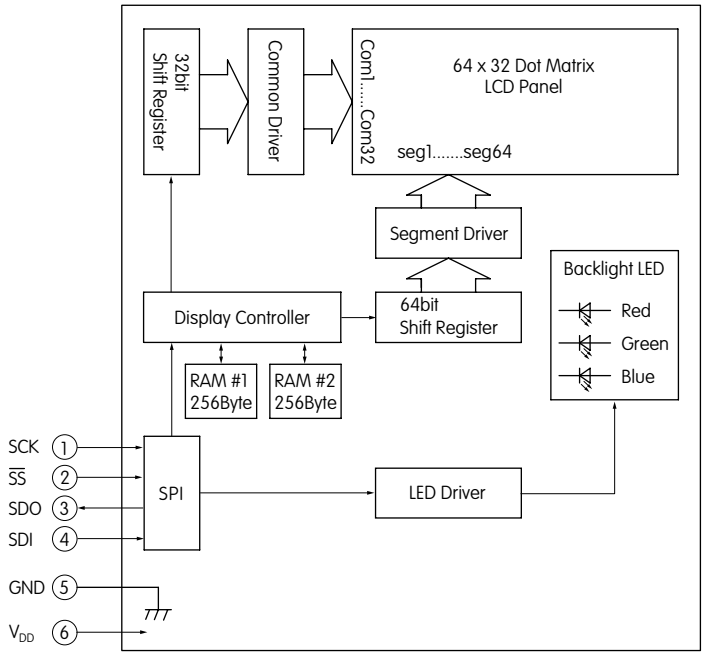

Pin No.	Symbol	Name	Function
1	SCK	Serial Clock	Clock line for SPI that synchronizes commands and data
2	$\overline{SS}$	Slave Select	Chip select for SPI; line is active low
3	SDO	Data Out	Data output line for SPI
4	SDI	Data In	Data input line for SPI
5	GND	Ground	
6	V_{DD}	Power	Power source for logic circuit and LCD

TYPICAL DISPLAY DIMENSIONS

Terminal numbers are not on the device.

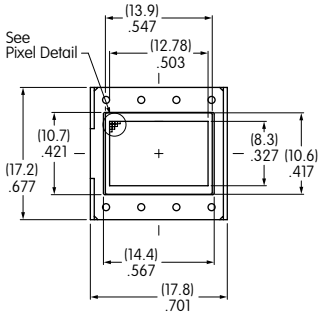

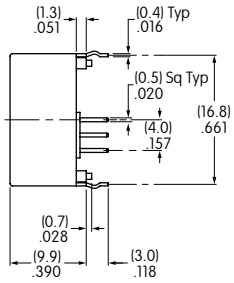

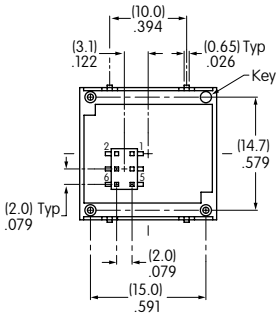

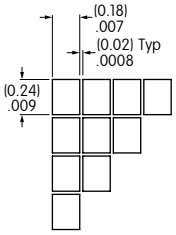

Pixel Detail

Footprint

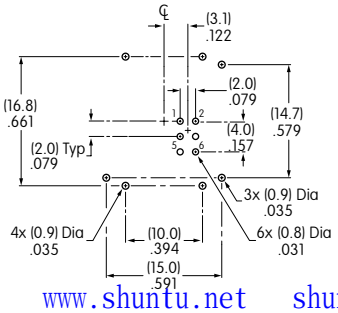

进口OLED显示屏按钮开关价格查询　全国统一热线 4006-022-002　www.shuntu.net　shunto@126.com

视频开关OLED进口视频切换开关　智能化开关日本显示屏按钮开关说明书　OLED开关选型样本pdf资料
智能开关智能按钮开关OLED显示屏开关　播放开关映像设备开关音响开关　可编程开关OLED按钮开关OLED按键开关

TIMING SPECIFICATIONS FOR SWITCH & DISPLAY

SPI Characteristics (See Timing Diagram)

(Temperature at −15°C ~ +50°C and V_{DD} = 5.0V ± 2%)

Items	Symbols	Minimum	Maximum
SPI_$\overline{SS}$ Set Up Time	tsSS	10ns	
SPI_$\overline{SS}$ Hold Time	thSS	10ns	
SPI_CLK Cycle	tcycCK		8MHz
SPI_CLK Width	thwCK	10ns	
SPI_DI Set Up Time	tsDI	10ns	
SPI_DI Hold Time	thDI	10ns	
SPI_DO Delay Time	tdDO	10ns	

Circuit Example

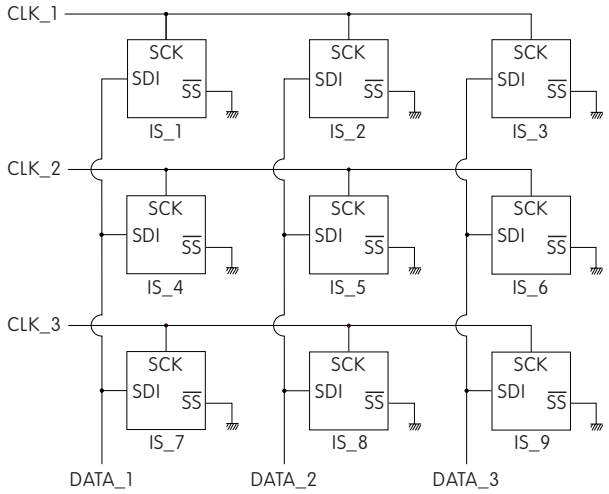

SPI Timing Chart ($\overline{SS}$ Using)

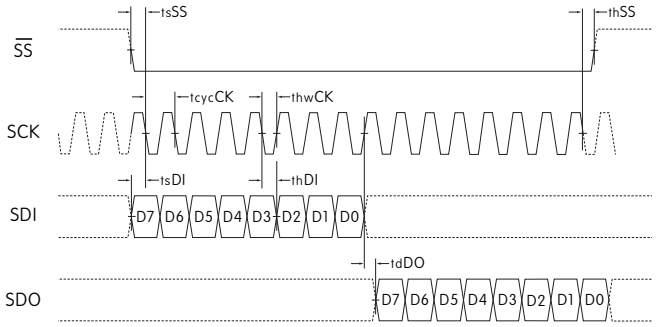

SPI Timing Chart ($\overline{SS}$ Low Level Fixed)

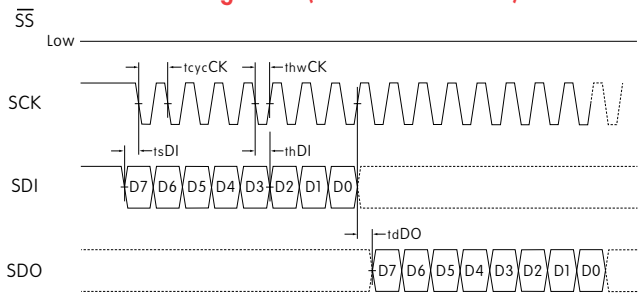

SDI and SCK shall be kept high when idle.

BITMAP

	Segment				
Common	**1 2 3 4 5 6 7 8**	**9 • • • 16**	**• • • • •**	**49 • • • 56**	**57 58 59 60 61 62 63 64**
	Byte8	Byte7	• • •	Byte2	Byte1
COM1	D0 D1 D2 D3 D4 D5 D6 D7	D0 • • • D7	• • •	D0 • • • D7	D0 D1 D2 D3 D4 D5 D6 D7
	Byte16				Byte9
COM2	D0 D1 D2 D3 D4 D5 D6 D7				D0 D1 D2 D3 D4 D5 D6 D7
•	•				•
•	•				•
•	•				•
	Byte256	• • •		• • •	Byte249
COM32	D0 D1 D2 D3 D4 D5 D6 D7				D0 D1 D2 D3 D4 D5 D6 D7

Transferring Display Data/Displaying LCD Command and Data Sequence

Command	Data (256 Bytes)		
0 x 55	Byte1	Byte2 • • • Byte255	Byte256
0 1 0 1 0 1 0 1	D7 D6 D5 D4 D3 D2 D1 D0	D7 D6 • • • D1 D0	D7 D6 D5 D4 D3 D2 D1 D0

Notes: Display RAM has two screen areas. The first area is for the display on current LCD; the second area is for the data to be displayed next. The screens are changed when the second area is fully stored.

进口OLED显示屏按钮开关价格查询　全国统一热线 4006-022-002　www.shuntu.net　shunto@126.com

视频开关OLED进口视频切换开关　智能化开关日本显示屏按钮开关说明书　OLED开关选型样本pdf资料
智能开关智能按钮开关OLED显示屏开关　播放开关映像设备开关音响开关　可编程开关OLED按钮开关OLED按键开关

COMMANDS & DATA FOR SWITCH & DISPLAY

- Transferring display data/displaying on LCD: command (1 Byte) + data (256 Bytes)
- Others: command (1 Byte) + data (1 Byte)
- Commands can be accepted only when all bits coincide; otherwise, they are not acknowledged
- Additional commands will not be received until the communication of commands (1 Byte) and data (256 or 1 Byte) is completed
- There is no time limit from the beginning to end of data receipt
- Commands may be executed consecutively (no need to wait between commands)
- Irregular commands or data are not recognized
- Initial status at power activation: LCD display off, LED off (brightness 1/20, color off)

Transferring Display Data/Displaying on LCD

Command		Data	Remarks
Hex	Binary		
0 x 55	01010101	256 Bytes (64 x 32 = 2,048 bits)	See previous page for details of bitmap data

LED (Backlight) Color Set

Command		Data	Remarks
Hex	Binary		
0 x 40	01000000	R R G G B B 1 1 2 bits x 3	For each of RGB: 00 = off　10 = 1/2 01 = 1/4　11 = full

LED (Backlight) Brightness Set

Command		Data	Remarks
Hex	Binary		
0 x 41	01000001	* * * 1 1 1 1 1 3 bits	For leading 3bits: 000 = 1/20 (dark)　100 = 1/3 001 = 1/10　101 = 1/2 010 = 1/7　110 = 2/3 011 = 1/5　111 = full (bright)

Reset (Returning to Initial Status at Power Activation)

Command		Data	Remarks
Hex	Binary		
0 x 5E	01011110	00000011	Returning to initial status at power activation

进口OLED显示屏按钮开关价格查询　全国统一热线 4006-022-002　www.shuntu.net　shunto@126.com

视频开关OLED进口视频切换开关　智能化开关日本显示屏按钮开关说明书　OLED开关选型样本pdf资料
智能开关智能按钮开关OLED显示屏开关　播放开关映像设备开关音响开关　可编程开关OLED按钮开关OLED按键开关

DISTINCTIVE CHARACTERISTICS

Compact Size Combined with High Resolution

- High resolution of 64 x 32 pixels
- 64 colors of backlighting can be controlled dynamically
- Pushbutton switch with LCD, RGB LED backlighting
- General brightness of backlight is dynamically controlled in eight steps from dark to bright
- Operated by commands and data supplied via serial communications (SPI)
- Can display as many as four lines of text with ten characters each
- Incorporates bitmap display function
- Programmable display graphics for alphanumeric characters and animated sequences
- Dual image VRAM for quick change of displayed images
- Low energy consumption
- Dust tight construction

Viewing area: 13.0mm x 10.7mm (horizontal x vertical)

Variety of LED backlighting with 64 colors and 8 steps brightness

Dome gives crisp tactile feedback to positively indicate circuit transfer

Epoxy sealed straight PC terminals

Snap-in standoff for easy, secure mounting and alignment

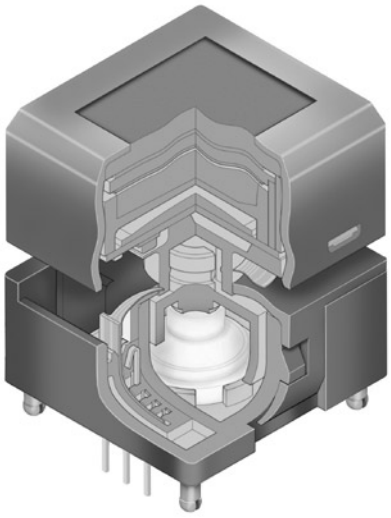

Actual Size

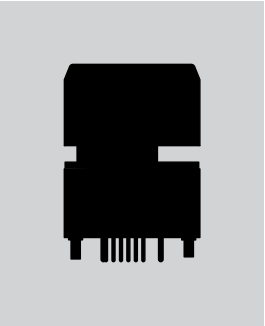

PART NUMBER & DESCRIPTION

Part Number	Switch Description	LCD Mode	LED Color
IS15DSBFP4RGB	SPST Momentary ON Gold Contacts Straight PC Terminals	Black & White FSTN Positive	Red/Green/Blue

进口OLED显示屏按钮开关价格查询　全国统一热线 4006-022-002　www.shuntu.net　shunto@126.com

视频开关OLED进口视频切换开关　智能化开关日本显示屏按钮开关说明书　OLED开关选型样本pdf资料
智能开关智能按钮开关OLED显示屏开关　播放开关映像设备开关音响开关　可编程开关OLED按钮开关OLED按键开关

SWITCH SPECIFICATIONS

Circuit	SPST normally open
Electrical Capacity (Resistive Load)	100mA @ 12V DC
Contact Resistance	200 milliohms maximum @ 20mV 10mA
Insulation Resistance	100 megohms minimum @ 100V DC
Dielectric Strength	125V AC for 1 minute minimum
Mechanical Endurance	1,000,000 operations minimum
Electrical Endurance	1,000,000 operations minimum
Operating Force	1.7 ± 0.5 Newtons
Total Travel	1.8mm (.071")

Absolute Maximum Ratings (Temperature at 25°C)

Items	Symbols	Ratings
Supply Voltage	V_{DD}	−0.3V to +7.0V
Input Voltage	V_I	−0.3V to V_{DD} +0.3V
Output Voltage	V_O	−0.3V to V_{DD} +0.3V

Optical Characteristics (Temperature at 25°C)

Items		Symbols	Min	Typical	Max
Contrast Ratio		Cr	—	3.0	—
Viewing Angle (Cr ≥ 1.1)	Up & Down	θ	—	90°	—
	Right & Left	ϕ	—	90°	—

LCD SPECIFICATIONS

Characteristics of Display

Display Operation Mode	FSTN positive; background colors, black & white
Display Condition	Transflective with built-in LED backlight
Viewing Angle Direction	6 o'clock
Viewing Area	13.0mm x 10.7mm (horizontal x vertical)
Pixel Format	64 x 32 pixels (horizontal x vertical)
Pixel Size	0.18mm x 0.24mm (horizontal x vertical)
*** Operating Temp Range**	−15°C ~ +50°C (+5°F ~ +122°F)
Storage Temp Range	−20°C ~ +60°C (−4°F ~ +140°F)
Backlight LED	**RGB:** red/green/blue

* In a low temperature environment (below 0°C), speed and contrast decrease when image changes. The non-indicator dot may become dense in a high temperature environment (about +50°C).

Recommended Operating Conditions (Temperature at 25°C)

Items	Symbols	Min	Typical	Max
Supply Voltage	V_{DD}	4.9V	5.0V	5.1V
High Level Input Voltage	V_{IH}	0.8 V_{DD}	—	—
Low Level Input Voltage	V_{IL}	—	—	0.2V_{DD}
SPI Clock Frequency	f_{SCK}	—	—	8MHz
Current Consumption	I_{DD}	** 10mA	—	*** 50mA

** 10mA: Backlighting LED is off
*** 50mA: Backlighting LEDs (Red, Green, Blue) are maximum brightness

BLOCK DIAGRAM & PIN CONFIGURATIONS

IS15DSBFP4RGB
RGB LED and
Black and White LCD Mode

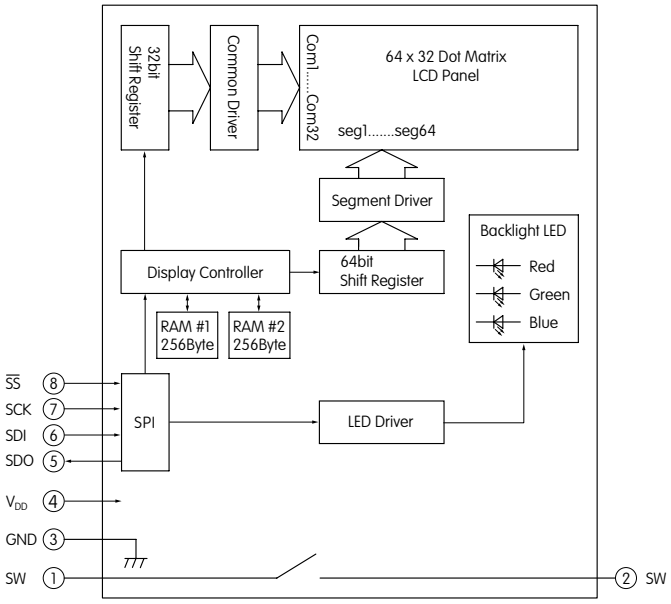

Pin No.	Symbol	Name	Function
1	**SW**	Terminal of Switch	Normally open
2	**SW**	Terminal of Switch	Normally open
3	**GND**	Ground	
4	**V_{DD}**	Power	Power source for logic circuit and LCD
5	**SDO**	Data Out	Data output line for SPI
6	**SDI**	Data In	Data input line for SPI
7	**SCK**	Serial Clock	Clock line for SPI that synchronizes commands and data
8	**$\overline{SS}$**	Slave Select	Chip select for SPI; line is active low

进口OLED显示屏按钮开关价格查询　全国统一热线 4006-022-002　www.shuntu.net　shunto@126.com

视频开关OLED进口视频切换开关　智能化开关日本显示屏按钮开关说明书　OLED开关选型样本pdf资料
智能开关智能按钮开关OLED显示屏开关　播放开关映像设备开关音响开关　可编程开关OLED按钮开关OLED按键开关

TYPICAL SWITCH DIMENSIONS

Terminal numbers are not on the switch.

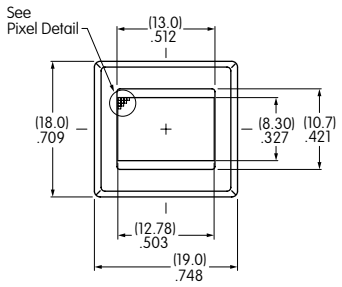

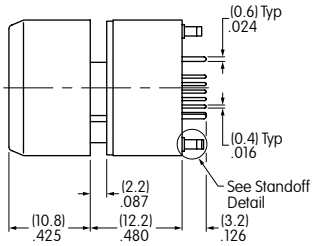

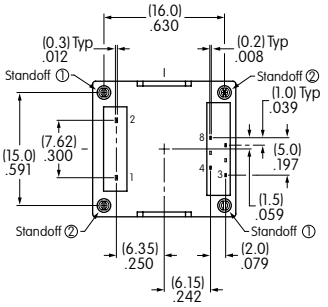

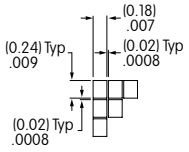

Pixel Detail

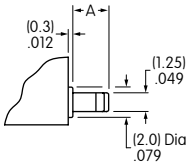

Standoff Detail

Dimension A

Standoff 1 = (2.7) .106　Standoff 2 = (2.3) .091

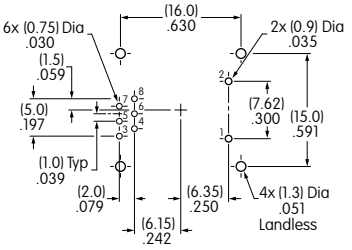

Footprint

TIMING SPECIFICATIONS

SPI Characteristics (See Timing Diagram)

(Temperature at −15°C ~ +50°C and V_{DD} = 5.0V ± 2%)

Items	Symbols	Minimum	Maximum
SPI_$\overline{SS}$ Set Up Time	tsSS	10ns	
SPI_$\overline{SS}$ Hold Time	thSS	10ns	
SPI_CLK Cycle	tcycCK		8MHz
SPI_CLK Width	thwCK	10ns	
SPI_DI Set Up Time	tsDI	10ns	
SPI_DI Hold Time	thDI	10ns	
SPI_DO Delay Time	tdDO	10ns	

Circuit Example

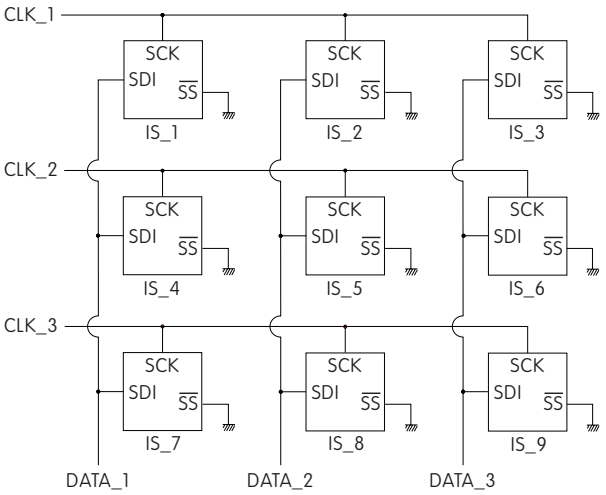

SPI Timing Chart ($\overline{SS}$ Using)

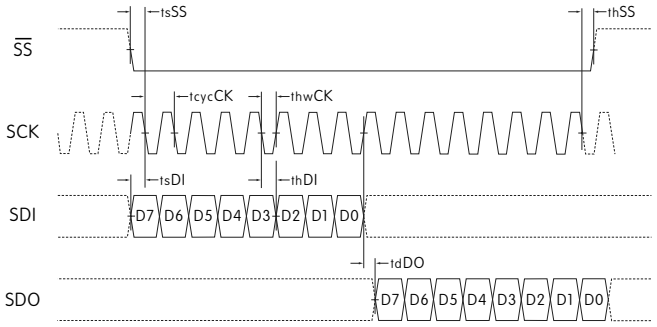

SPI Timing Chart ($\overline{SS}$ Low Level Fixed)

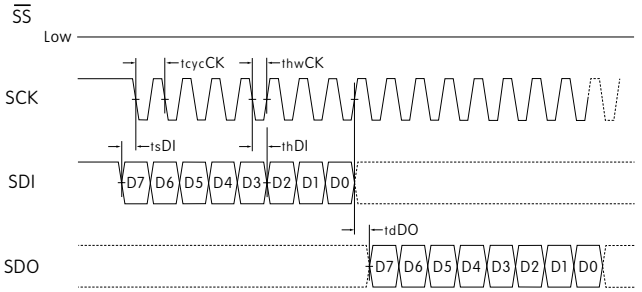

SDI and SCK shall be kept high when idle.

进口OLED显示屏按钮开关价格查询　全国统一热线 4006-022-002　www.shuntu.net　shunto@126.com

视频开关OLED进口视频切换开关　智能化开关日本显示屏按钮开关说明书　OLED开关选型样本pdf资料
智能开关智能按钮开关OLED显示屏开关　播放开关映像设备开关音响开关　可编程开关OLED按钮开关OLED按键开关

BITMAP

Common	Segment 1 2 3 4 5 6 7 8	9 • • • 16	• • • • •	49 • • • 56	57 58 59 60 61 62 63 64
	Byte8	Byte7	• • •	Byte2	Byte1
COM1	D0 D1 D2 D3 D4 D5 D6 D7	D0 • • • D7	• • •	D0 • • • D7	D0 D1 D2 D3 D4 D5 D6 D7
	Byte16				Byte9
COM2	D0 D1 D2 D3 D4 D5 D6 D7				D0 D1 D2 D3 D4 D5 D6 D7
•	•				•
•	•				•
•	•				•
	Byte256	• • •		• • •	Byte249
COM32	D0 D1 D2 D3 D4 D5 D6 D7				D0 D1 D2 D3 D4 D5 D6 D7

Transferring Display Data/Displaying LCD Command and Data Sequence

Command	Data (256 Bytes)		
0 x 55	Byte1	Byte2 • • • Byte255	Byte256
0 1 0 1 0 1 0 1	D7 D6 D5 D4 D3 D2 D1 D0	D7 D6 • • • D1 D0	D7 D6 D5 D4 D3 D2 D1 D0

Notes: Display RAM has two screen areas. The first area is for the display on current LCD; the second area is for the data to be displayed next. The screens are changed when the second area is fully stored.

COMMANDS & DATA

- Transferring display data/displaying on LCD: command (1 Byte) + data (256 Bytes)
- Others: command (1 Byte) + data (1 Byte)
- Commands can be accepted only when all bits coincide; otherwise, they are not acknowledged
- Additional commands will not be received until the communication of commands (1 Byte) and data (256 or 1 Byte) is completed
- There is no time limit from the beginning to end of data receipt
- Commands may be executed consecutively (no need to wait between commands)
- Irregular commands or data are not recognized
- Initial status at power activation: LCD display off, LED off (brightness 1/20, color off)

Transferring Display Data/Displaying on LCD

Command Hex	Command Binary	Data	Remarks
0 x 55	01010101	256 Bytes (64 x 32 = 2,048 bits)	See above for details of bitmap data

LED (Backlight) Color Set

Command Hex	Command Binary	Data	Remarks
0 x 40	01000000	R R G G B B 1 1 2 bits x 3	For each of RGB: 00 = off　10 = 1/2 01 = 1/4　11 = full

LED (Backlight) Brightness Set

Command Hex	Command Binary	Data	Remarks
0 x 41	01000001	* * * 1 1 1 1 1 3 bits	For leading 3bits: 000 = 1/20 (dark)　100 = 1/3 001 = 1/10　101 = 1/2 010 = 1/7　110 = 2/3 011 = 1/5　111 = full (bright)

Reset (Returning to Initial Status at Power Activation)

Command Hex	Command Binary	Data	Remarks
0 x 5E	01011110	00000011	Returning to initial status at power activation

进口OLED显示屏按钮开关价格查询　全国统一热线 4006-022-002　www.shuntu.net　shunto@126.com

视频开关OLED进口视频切换开关 智能化开关日本显示屏按钮开关说明书 OLED开关选型样本pdf资料
智能开关智能按钮开关OLED显示屏开关 播放开关映像设备开关音响开关 可编程开关OLED按钮开关OLED按键开关

PRECAUTIONS FOR HANDLING & STORAGE OF LCD 64 x 32 DEVICES

Handling

ATTENTION
ELECTROSTATIC
SENSITIVE DEVICES

1. The IS Series devices are electrostatic sensitive.
2. Limit operating force to keytop to 100.0N maximum, as excessive pressure may damage the LCD device.
3. The IS series devices are not process sealed.
4. If the LCD is accidentally broken, avoid contact with the liquid and wash off any liquid spills to the skin or clothing.
5. Clean cap surface with dry cloth. If further cleaning is needed, wipe with dampened cloth using neutral cleanser and dry with clean cloth. Do not use organic solvent.
6. Recommended soldering time and temperature limits:

   Wave Soldering: see Profile B in Supplement section.

   Manual Soldering Switches: see Profile A in Supplement section.

   Manual Soldering Display: see Profile B in Supplement section.
7. Do not exceed 60°C at the LCD level.

Storage

1. Store in original container and away from direct sunlight.
2. Keep away from static electricity.
3. Avoid extreme temperatures, high humidity, gaseous substances, and all forms of chemical contamination.

进口OLED显示屏按钮开关价格查询 全国统一热线 4006-022-002 www.shuntu.net shunto@126.com

视频开关OLED进口视频切换开关　智能化开关日本显示屏按钮开关说明书　OLED开关选型样本pdf资料
智能开关智能按钮开关OLED显示屏开关　播放开关映像设备开关音响开关　可编程开关OLED按钮开关OLED按键开关

DISTINCTIVE CHARACTERISTICS

Standard with Enhanced LED Illumination:

- Broad and even light diffusion
- Consistent backlighting
- Low energy consumption

Programmable LCD

Variety of LED Backlighting Colors

Rubber Dome

Epoxy Sealed Straight PC Terminals

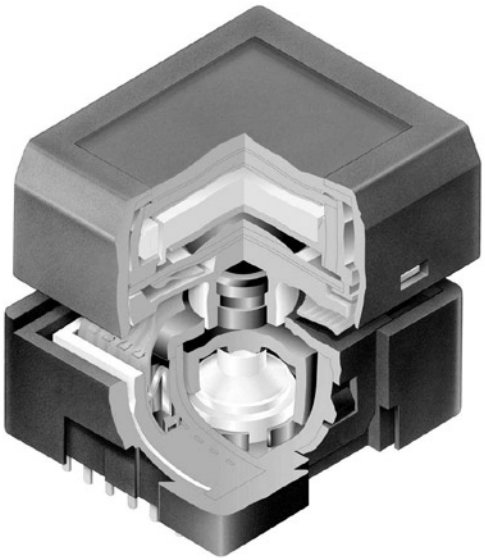

RGB backlighting provides infinite color availability.

Programmable to display graphics, alphanumeric characters and animated sequences.

Integrated liquid crystal display provides wide viewing angle with high contrast and clarity.

Wide viewing area 15.0mm x 10.8mm (horizontal x vertical) at 36 x 24 pixels.

Dome gives crisp tactile feedback to positively indicate circuit transfer.

High reliability and long life of one million actuations minimum.

Epoxy sealed terminals prevent entry of solder flux and other contaminants.

Optional accessories available to enhance panel design and simplify production process.

Actual Sizes

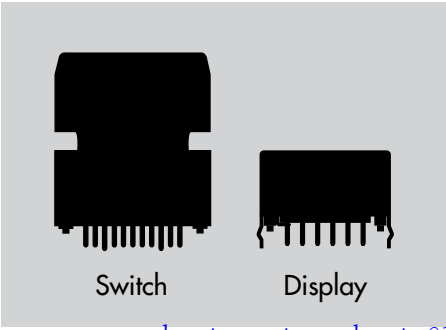

进口OLED显示屏按钮开关价格查询　全国统一热线 4006-022-002　www.shuntu.net　shunto@126.com

视频开关OLED进口视频切换开关　智能化开关日本显示屏按钮开关说明书　OLED开关选型样本pdf资料
智能开关智能按钮开关OLED显示屏开关　播放开关映像设备开关音响开关　可编程开关OLED按钮开关OLED按键开关

STANDARD LED BACKLIGHTING

Part Number	Switch Description	LCD Mode	LED Color
IS15AACP4CF	SPST Momentary ON Gold Contacts Straight PC Terminals	Yellow STN Positive	* Red/Green

* Simultaneous illumination of both colors achieves third color.

SUPER BRIGHT LED BACKLIGHTING

Part Number	Switch Description	LCD Mode	LED Color
IS15ABCP4CF	SPST Momentary ON Gold Contacts Straight PC Terminals	Yellow STN Positive	* Red/Green
IS15ABCP4E		Yellow STN Positive	Yellow
IS15ABCP4EF		Yellow STN Positive	* Yellow/Green
IS15ABDP4E		Blue STN Negative	Yellow
IS15ABDP4EG		Blue STN Negative	* Yellow/Blue
IS15ABDP4B		Blue STN Negative	White
IS15ABFP4B		Black & White FSTN Positive	White

* Simultaneous illumination of both colors achieves third color.

RGB LED BACKLIGHTING

Part Number	Switch Description	LCD Mode	LED Color
IS15ABFP4RGB	SPST Momentary ON Gold Contacts Straight PC Terminals	Black & White FSTN Positive	* Red/Green/Blue

* Simultaneous RGB illumination achieves infinite colors.

SWITCH SPECIFICATIONS

Circuit	SPST normally open
Electrical Capacity (Resistive Load)	100mA @ 12V DC
Contact Resistance	200 milliohms maximum @ 20mV 10mA
Insulation Resistance	100 megohms minimum @ 100V DC
Dielectric Strength	125V AC for 1 minute minimum
Mechanical Endurance	1,000,000 operations minimum
Electrical Endurance	1,000,000 operations minimum
Operating Force	2.2 ± 0.5 Newtons
Total Travel	1.8mm (.071")
Operating Temperature Range	0°C ~ +40°C (+32°F ~ +104°F); contact factory for wide temperature range options
Storage Temperature Range	−10°C ~ +60°C (+14°F ~ +140°F); contact factory for wide temperature range options

进口OLED显示屏按钮开关价格查询　全国统一热线 4006-022-002　www.shuntu.net　shunto@126.com

视频开关OLED进口视频切换开关　智能化开关日本显示屏按钮开关说明书　OLED开关选型样本pdf资料
智能开关智能按钮开关OLED显示屏开关　播放开关映像设备开关音响开关　可编程开关OLED按钮开关OLED按键开关

LCD SPECIFICATIONS

Characteristics of Display

Display Operation Mode	STN positive, STN negative, FSTN positive
Display Condition	Transflective with built-in LED backlight
Viewing Angle	Adjustable
Driving Method	1/24 duty. 1/5 bias (built-in driving circuit)
Viewing Area	15.0mm x 10.8mm (horizontal x vertical)
Pixel Format	36 x 24 pixels (horizontal x vertical)
Pixel Size	0.36mm x 0.36mm (horizontal x vertical)
Backlight LED	**Single color:** yellow, white **Bicolor:** red/green, yellow/green, yellow/blue **RGB:** red/green/blue

Absolute Maximum Ratings (Temperature at 25°C)

Items	Symbols	Ratings
Supply Voltage for Logics	V_{DD}	−0.3V to +7.0V
Supply Voltage for LCD	V_{LC}	−0.3V to +12.0V
Input Voltage	V_I	−0.3V to V_{DD} +0.3V
Output Voltage	V_O	−0.3V to V_{DD} +0.3V

Recommended Operating Conditions (Temperature at 25°C)

Items	Symbols	Minimum	Typical	Maximum
Supply Voltage for Logics	V_{DD}	4.5V	5.0V	5.5V
Supply Voltage Yellow	V_{LC}	—	7.4V	—
Supply Voltage Blue	V_{LC}	—	7.5V	—
Supply Voltage Black/White	V_{LC}	—	7.3V	—
Input Voltage	V_I	0V	—	V_{DD}
Driving Frequency	f_{FLM}	—	64Hz: yellow/blue 150Hz: black/white	—

DC Characteristics of LCD Drive (Temperature at 0°C to 40°C and V_{DD} = 5.0V ±10%)

Items	Symbols	Test Conditions	Minimum	Typical	Maximum	Unit
High Level Input Voltage	V_{IH}		$0.7V_{DD}$		V_{DD}	V
Low Level Input Voltage	V_{IL}		0		$0.3V_{DD}$	V
High Level Input Leakage Current	I_{LIH}	$V_I = V_{DD}$			10	μA
Low Level Input Leakage Current	I_{LIL}	V_I = 0V			−10	μA
High Level Output Voltage	V_{OH}	I_{OH} = −500μA	V_{DD}−0.5			V
Low Level Output Voltage	V_{OL}	I_{OL} = 500μA			0.5	V
High Level Output Leakage Current	I_{LOH}	$V_O = V_{DD}$			10	μA
Low Level Output Leakage Current	I_{LOL}	V_O = 0V			−10	μA
Supply Current	I_{DD}	f_{SCP} = 1.0MHz			500	μA
LCD Drive Current	I_{LC}	f_{LP} = 2.4Hz V_{LC} = 7.3V ~ 7.5V		500	2,000	μA

Timing Characteristics of LCD Drive IC

(Temperature at 0°C to 40°C and V_{DD} = 5.0V ±10%)

Items	Symbols	Minimum	Maximum
Clock Operation Frequency	f_{SCP}		6.0MHz
Latch Pulse Frequency	f_{LP}		50kHz
Clock High Level Pulse Width	t_{CWH}	70ns	
Clock Low Level Pulse Width	t_{CWL}	70ns	
Data Setup Time	t_{DSD}	45ns	
Data Hold Time	t_{DHD}	50ns	
Data Output Delay Time	t_{PDO}		25ns
Latch Setup Time	t_{DSL}	50ns	
Latch Hold Time	t_{DHL}	50ns	
Latch High Level Width	t_{LWH}	200ns	
FLM Setup Time	t_{DSF}	50ns	
FLM Hold Time	t_{DHF}	50ns	
SCP, LP Rise/Fall Time	t_r/t_f		15ns

Timing Diagram

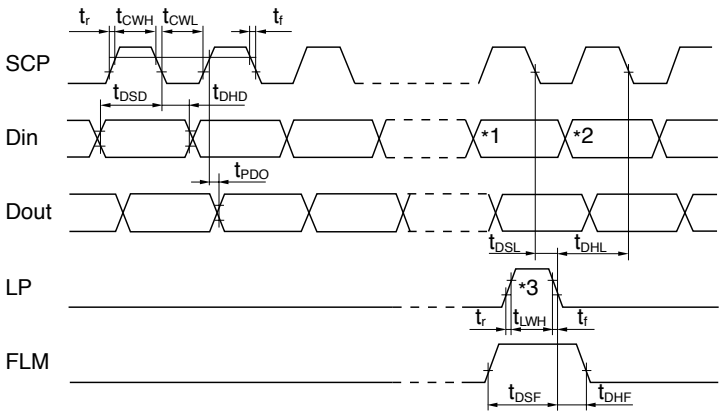

*1 Last data on first line
*2 Beginning data on second line
*3 Location of LP signal on first line

进口OLED显示屏按钮开关价格查询　全国统一热线 4006-022-002　www.shuntu.net　shunto@126.com

视频开关OLED进口视频切换开关　智能化开关日本显示屏按钮开关说明书　OLED开关选型样本pdf资料
智能开关智能按钮开关OLED显示屏开关　播放开关映像设备开关音响开关　可编程开关OLED按钮开关OLED按键开关

BLOCK DIAGRAM & PIN CONFIGURATIONS FOR STANDARD OR SUPER BRIGHT LEDS

IS15ABCP4CF
Yellow LCD Mode

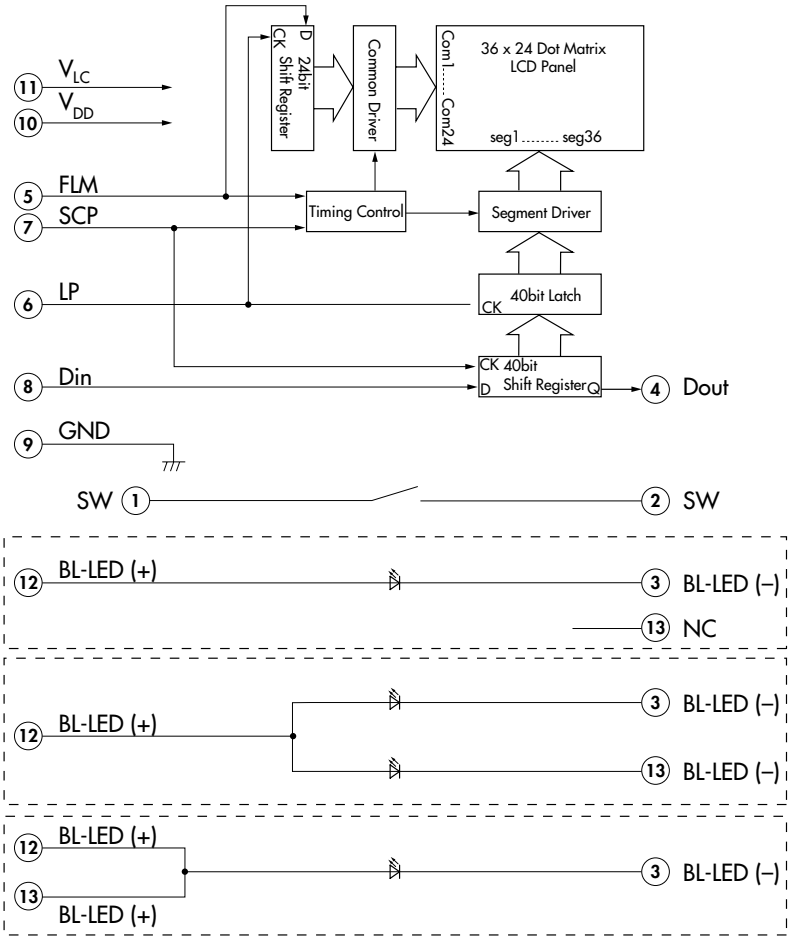

Pin No.	Symbol	Name	Function
1	**SW**	Terminal of Switch	Normally open
2	**SW**	Terminal of Switch	Normally open
3	**BL-LED (–)**	Terminal of Backlight LED	Cathode: **standard bicolor** - green for red/green. **super bright bicolor** - red for red/green; yellow for yellow/green or yellow/blue.
4	**Dout**	Data Output	Display serial output. Can be used to connect to Din of the next SMARTSWITCH. As a result, many SMARTSWITCHES can be controlled with one clock and data signal.
5	**FLM**	First Line Marker	The marking signal for the first line data of LCD display. The first line of LCD will be selected by the falling edge of LP signal during the high level (FLM).
6	**LP**	Latch Pulse	Line data latch pulse will latch content of internal 40-bit shift register at falling edge for one line of display. LP will also increment the display line by one.
7	**SCP**	Serial Clock Pulse	Clock used by 40-bit internal shift register of the switch, shifting the display data bit presented at Din at falling edge.
8	**Din**	Data Input	Display serial data bit. Note: to map the display data, because of the difference between the number of internal shift register data (40) and the single line of LCD pixels (36), the first four bits of data shifted will be dummy bits.
9	**GND**	Ground	
10	**V_{DD}**	Power	Power source for logic circuit
11	**V_{LC}**	Power	Power source for LCD drive
12	**BL-LED (+)**	Terminal of Backlight LED	Anode for common
13	**NC**	None	No connection for single color yellow
	BL-LED (–)	Terminal of Backlight LED	Cathode for bicolor
	BL-LED (+)	Terminal of Backlight LED	Anode for single color white

进口OLED显示屏按钮开关价格查询　全国统一热线 4006-022-002　www.shuntu.net　shunto@126.com

视频开关OLED进口视频切换开关　智能化开关日本显示屏按钮开关说明书　OLED开关选型样本pdf资料
智能开关智能按钮开关OLED显示屏开关　播放开关映像设备开关音响开关　可编程开关OLED按钮开关OLED按键开关

BLOCK DIAGRAM & PIN CONFIGURATIONS FOR RGB LEDS

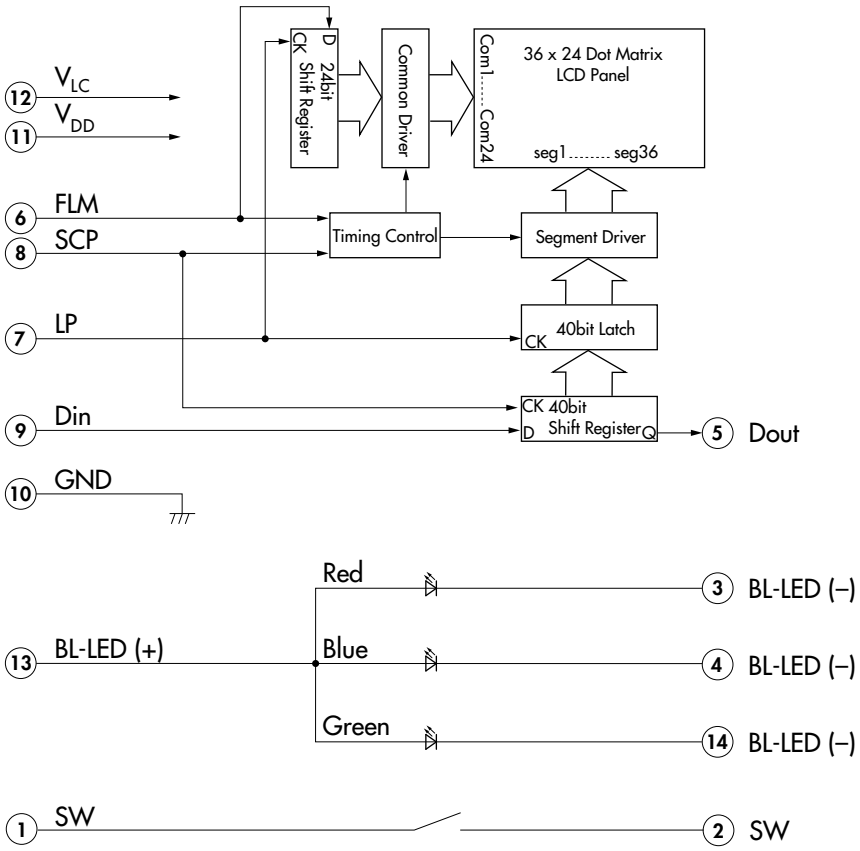

IS15ABFP4RGB
RGB LED Option and Black and White LCD Mode

Pin No.	Symbol	Name	Function
1	**SW**	Terminal of Switch	Normally open
2	**SW**	Terminal of Switch	Normally open
3	**BL-LED (–)**	Terminal of Backlight LED	Cathode for red
4	**BL-LED (–)**	Terminal of Backlight LED	Cathode for blue
5	**Dout**	Data Output	Display serial output. Can be used to connect to Din of the next SMARTSWITCH. As a result, many SMARTSWITCHES can be controlled with one clock and data signal.
6	**FLM**	First Line Marker	The marking signal for the first line data of LCD display. The first line of LCD will be selected by the falling edge of LP signal during the high level (FLM).
7	**LP**	Latch Pulse	Line data latch pulse will latch content of internal 40-bit shift register at falling edge for one line of display. LP will also increment the display line by one.
8	**SCP**	Serial Clock Pulse	Clock used by 40-bit internal shift register of the switch, shifting the display data bit presented at Din at falling edge.
9	**Din**	Data Input	Display serial data bit. Note: to map the display data, because of the difference between the number of internal shift register data (40) and the single line of LCD pixels (36), the first four bits of data shifted will be dummy bits.
10	**GND**	Ground	
11	**V_{DD}**	Power	Power source for logic circuit
12	**V_{LC}**	Power	Power source for LCD drive
13	**BL-LED (+)**	Terminal of Backlight LED	Anode for common
14	**BL-LED (–)**	Terminal of Backlight LED	Cathode for green

进口OLED显示屏按钮开关价格查询　全国统一热线 4006-022-002　www.shuntu.net　shunto@126.com

视频开关OLED进口视频切换开关　智能化开关日本显示屏按钮开关说明书　OLED开关选型样本pdf资料
智能开关智能按钮开关OLED显示屏开关　播放开关映像设备开关音响开关　可编程开关OLED按钮开关OLED按键开关

STANDARD LED SPECIFICATIONS

Typical Electrical Characteristics (Temperature at 25°C)

Backlight Color	Symbols	Red/Green	Unit
Forward Current	I_F	15/15	mA
Forward Voltage	V_F	2.1/2.2	V

SUPER BRIGHT LED SPECIFICATIONS

Typical Electrical Characteristics (Temperature at 25°C)

Backlight Color	Symbols	Red/Green	Yellow/Green	Yellow	Yellow/Blue	White	Unit
Forward Current	I_F	15/15	15/15	15	15/15	20	mA
Forward Voltage	V_F	2.1/3.3	2.2/3.3	2.2	2.2/3.4	3.6	V

ABSOLUTE MAXIMUM FOR ALL STANDARD OR SUPER BRIGHT LEDS

Electrical Characteristics (Temperature at 25°C)

Backlight Color	Symbols	White	All Others	Unit
Forward Current	I_F	30	20	mA
Reverse Voltage	V_R	5.0	4.0	V
Current Reduction Rate Above 25°C	ΔI_F(DC)	−0.50	−0.26	mA/°C
*Power Dissipation	P_D	120	130	mW

*For uniform light emission, Power Dissipation should not exceed the Absolute Maximum Rating.

TYPICAL SWITCH DIMENSIONS WITH STANDARD OR SUPER BRIGHT LEDS

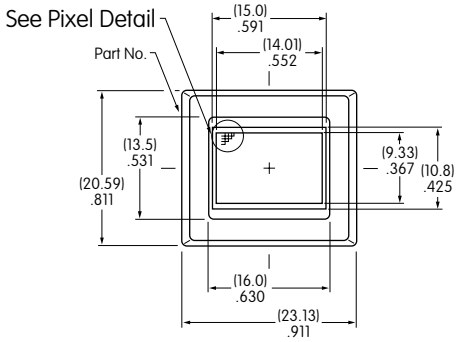

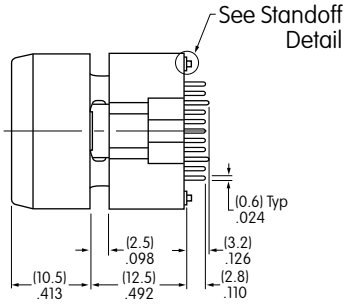

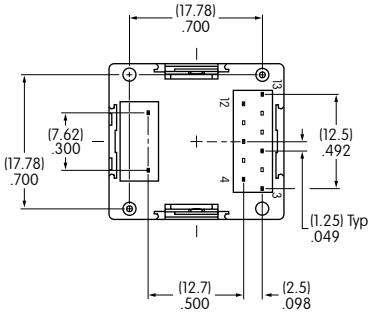

Terminal numbers are not on the switch.

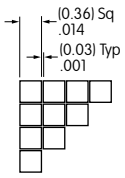

Pixel Detail

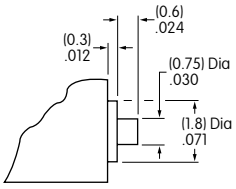

Standoff Detail

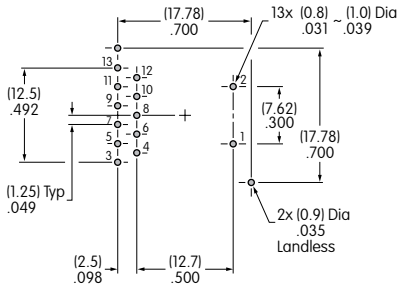

Footprint

进口OLED显示屏按钮开关价格查询　全国统一热线 4006-022-002　www.shuntu.net　shunto@126.com

视频开关OLED进口视频切换开关　智能化开关日本显示屏按钮开关说明书　OLED开关选型样本pdf资料
智能开关智能按钮开关OLED显示屏开关　播放开关映像设备开关音响开关　可编程开关OLED按钮开关OLED按键开关

SUPER BRIGHT RGB LED SPECIFICATIONS

Typical Electrical Characteristics (Temperature at 25°C)

Backlight Color	Symbols	Red	Green	Blue	Unit
Forward Current	I_F	10	10	10	mA
Forward Voltage	V_F	2.1	3.3	3.3	V

ABSOLUTE MAXIMUM FOR RGB LED

Electrical Characteristics (Temperature at 25°C)

Backlight Color	Symbols	Red/Green/Blue	Unit
Forward Current	I_F	20	mA
Reverse Voltage	V_R	4.0	V
Current Reduction Rate Above 25°C	ΔI_F(DC)	−0.27	mA/°C
*Power Dissipation	P_D	135	mW

*For uniform light emission, Power Dissipation should not exceed the Absolute Maximum Rating.

TYPICAL SWITCH DIMENSIONS WITH RGB LED

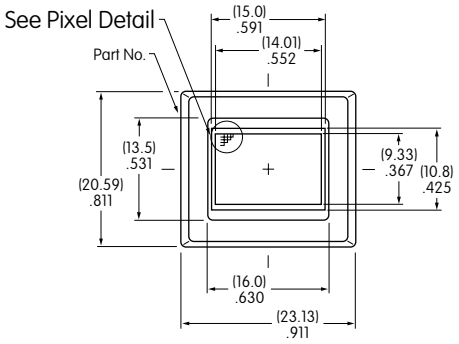

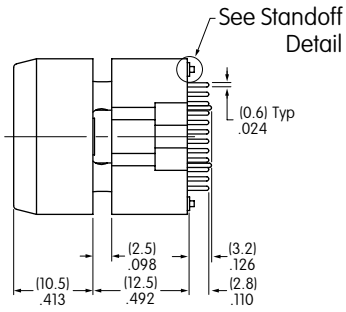

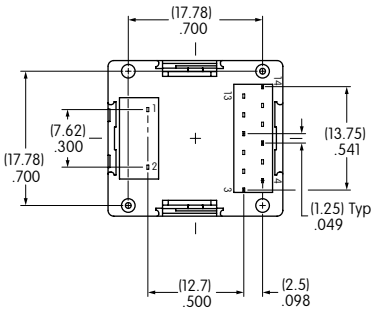

Terminal numbers are not on the switch.

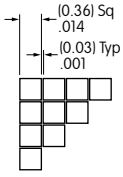

Pixel Detail

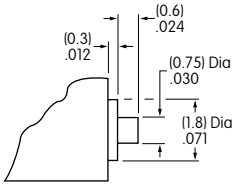

Standoff Detail

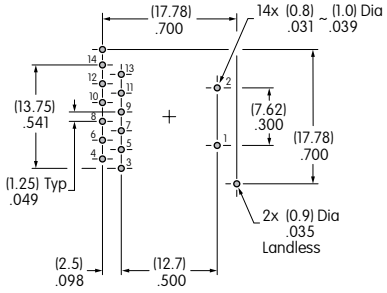

Footprint

进口OLED显示屏按钮开关价格查询　全国统一热线 4006-022-002　www.shuntu.net　shunto@126.com

视频开关OLED进口视频切换开关　智能化开关日本显示屏按钮开关说明书　OLED开关选型样本pdf资料
智能开关智能按钮开关OLED显示屏开关　播放开关映像设备开关音响开关　可编程开关OLED按钮开关OLED按键开关

DISTINCTIVE CHARACTERISTICS

Standard with Enhanced Illumination:

Programmable to display graphics, alphanumeric characters and animated sequences.

Standard SMARTDISPLAY™ can be used alone or in conjunction with electromechanical switches.

Integrated liquid crystal display provides wide viewing angle with high contrast and clarity.

Built-in single or bicolor LED backlighting enhances display and enables multifunctional uses. RGB LED provides numerous color variations.

Viewing area 13.9mm x 10.6mm (horizontal x vertical) at 36 x 24 pixels.

SUPER BRIGHT LED BACKLIGHTING

Part Number	Terminals	LCD Mode	LED Color
IS01BCCF	Straight PC	Yellow STN Positive	* Red/Green
IS01BCE	Straight PC	Yellow STN Positive	Yellow
IS01BCEF	Straight PC	Yellow STN Positive	* Yellow/Green

* Simultaneous illumination of both colors achieves third color.

RGB LED BACKLIGHTING

Part Number	Terminals	LCD Mode	LED Color
IS01BFRGB	Straight PC	Black & White FSTN Positive	** Red/Green/Blue

** Simultaneous RGB illumination achieves infinite colors.

进口OLED显示屏按钮开关价格查询　全国统一热线 4006-022-002　www.shuntu.net　shunto@126.com

视频开关OLED进口视频切换开关　智能化开关日本显示屏按钮开关说明书　OLED开关选型样本pdf资料
智能开关智能按钮开关OLED显示屏开关　播放开关映像设备开关音响开关　可编程开关OLED按钮开关OLED按键开关

LCD SPECIFICATIONS

Characteristics of Display

Display Operation Mode	STN positive, FSTN positive
Display Condition	Transflective with built-in LED backlight
Viewing Angle	Adjustable
Driving Method	1/24 duty. 1/5 bias (built-in driving circuit)
Viewing Area	13.9mm x 10.6mm (horizontal x vertical)
Pixel Format	36 x 24 pixels (horizonal x vertical)
Pixel Size	0.32mm x 0.32mm (horizontal x vertical)
Operating Temperature Range	0°C through 40°C (32°F through 104°F)
Storage Temperature Range	–10°C through 60°C (14°F through 140°F)
Backlight LED	**Single color:** yellow; **Bicolor:** red/green, yellow/green; **RGB:** red/green/blue

Absolute Maximum Ratings (Temperature at 25°C)

Items	Symbols	Ratings
Supply Voltage for Logics	V_{DD}	–0.3V to +7.0V
Supply Voltage for LCD	V_{LC}	–0.3V to +12.0V
Input Voltage	V_I	–0.3V to V_{DD} +0.3V
Output Voltage	V_O	–0.3V to V_{DD} +0.3V

Recommended Operating Conditions (Temperature at 25°C)

Items	Symbols	Minimum	Typical	Maximum
Supply Voltage for Logics	V_{DD}	4.5V	5.0V	5.5V
Supply Voltage LCD	V_{LC}	—	7.3V	—
Input Voltage	V_I	0V	—	V_{DD}
Driving Frequency	f_{FLM}	—	150Hz	—

DC Characteristics of LCD Drive IC (Temperature at 0°C to 40°C and V_{DD} = 5.0V ±10%)

Items	Symbols	Test Conditions	Minimum	Typical	Maximum	Unit
High Level Input Voltage	V_{IH}		$0.7V_{DD}$		V_{DD}	V
Low Level Input Voltage	V_{IL}		0		0.3 V_{DD}	V
High Level Input Leakage Current	I_{LIH}	$V_I = V_{DD}$			10	μA
Low Level Input Leakage Current	I_{LIL}	V_I = 0V			–10	μA
High Level Output Voltage	V_{OH}	I_{OH} = –500μA	V_{DD}–0.5			V
Low Level Output Voltage	V_{OL}	I_{OL} = 500μA			0.5	V
High Level Output Leakage Current	I_{LOH}	$V_O = V_{DD}$			10	μA
Low Level Output Leakage Current	I_{LOL}	V_O = 0V			–10	μA
Supply Current	I_{DD}	f_{SCP} = 1.0MHz			500	μA
LCD Drive Current	I_{LC}	f_{LP} = 2.4kHz V_{LC} = 7.3V		500	2,000	μA

Timing Characteristics of LCD Drive IC

(Temperature at 0°C to 40°C and V_{DD} = 5.0V ±10%)

Items	Symbols	Minimum	Maximum
Clock Operation Frequency	f_{SCP}		6.0MHz
Latch Pulse Frequency	f_{LP}		50kHz
Clock High Level Pulse Width	t_{CWH}	70ns	
Clock Low Level Pulse Width	t_{CWL}	70ns	
Data Setup Time	t_{DSD}	45ns	
Data Hold Time	t_{DHD}	50ns	
Data Output Delay Time	t_{PDO}		25ns
Latch Setup Time	t_{DSL}	50ns	
Latch Hold Time	t_{DHL}	50ns	
Latch High Level Width	t_{LWH}	200ns	
FLM Setup Time	t_{DSF}	50ns	
FLM Hold Time	t_{DHF}	50ns	
SCP, LP Rise/Fall Time	t_r/t_f		15ns

Timing Diagram

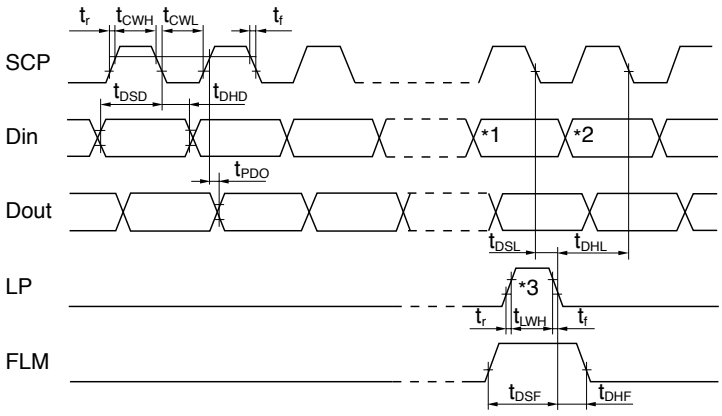

*1 Last data on first line
*2 Beginning data on second line
*3 Location of LP signal on first line

进口OLED显示屏按钮开关价格查询　全国统一热线 4006-022-002　www.shuntu.net　shunto@126.com

视频开关OLED进口视频切换开关　智能化开关日本显示屏按钮开关说明书　OLED开关选型样本pdf资料
智能开关智能按钮开关OLED显示屏开关　播放开关映像设备开关音响开关　可编程开关OLED按钮开关OLED按键开关

BLOCK DIAGRAM & PIN CONFIGURATIONS FOR SUPER BRIGHT LEDS

IS01BCCF
Yellow LCD Mode

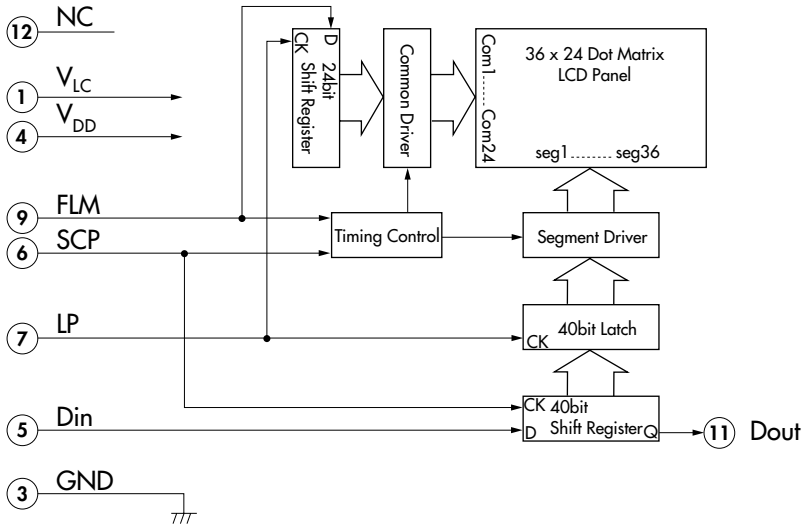

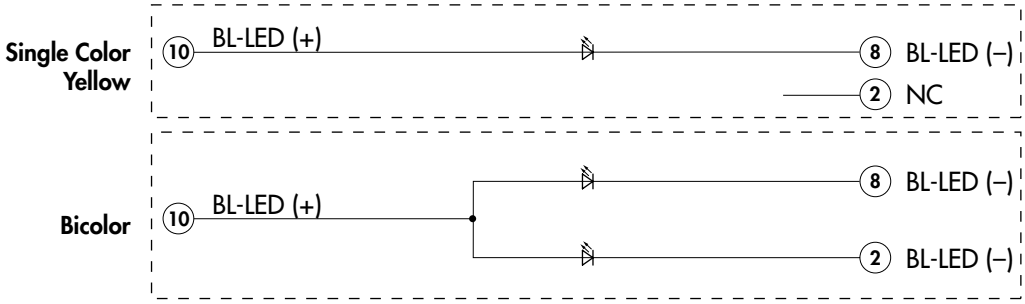

Pin No.	Symbol	Name	Function
1	V_{LC}	Power	Power source for LCD drive
2	**NC**	None	No connection for single color
	BL-LED (–)	Terminal of Backlight LED	Cathode for bicolor
3	**GND**	Ground	
4	V_{DD}	Power	Power source for logic circuit
5	**Din**	Data Input	Display serial data bit. Note: to map the display data, because of the difference between the number of internal shift register data (40) and the single line of LCD pixels (36), the first four bits of data shifted will be dummy bits.
6	**SCP**	Serial Clock Pulse	Clock used by 40-bit internal shift register of the switch, shifting the display data bit presented at Din at falling edge.
7	**LP**	Latch Pulse	Line data latch pulse will latch content of internal 40-bit shift register at falling edge for one line of display. LP will also increment the display line by one.
8	**BL-LED (–)**	Terminal of Backlight LED	Cathode: **super bright bicolor** - red for red/green or yellow for yellow/green
9	**FLM**	First Line Marker	The marking signal for the first line data of LCD display. The first line of LCD will be selected by the falling edge of LP signal during the high level (FLM).
10	**BL-LED (+)**	Terminal of Backlight LED	Anode for common
11	**Dout**	Data Output	Display serial output. Can be used to connect to Din of the next SMARTDISPLAY. As a result, many SMARTDISPLAYS can be controlled with one clock and data signal.
12	**NC**	None	No connection

进口OLED显示屏按钮开关价格查询　全国统一热线 4006-022-002　www.shuntu.net　shunto@126.com

视频开关OLED进口视频切换开关　智能化开关日本显示屏按钮开关说明书　OLED开关选型样本pdf资料
智能开关智能按钮开关OLED显示屏开关　播放开关映像设备开关音响开关　可编程开关OLED按钮开关OLED按键开关

BLOCK DIAGRAM & PIN CONFIGURATIONS FOR RGB LEDS

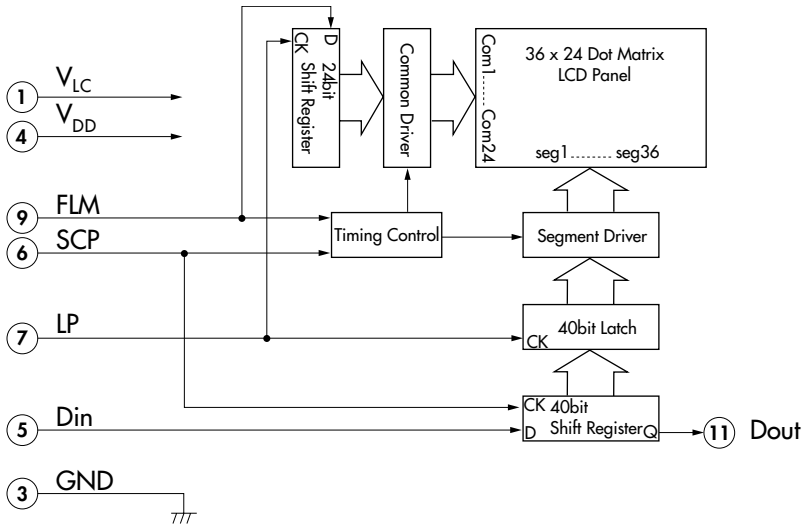

IS01BFRGB
RGB LED Option and Black and White LCD Mode

Pin No.	Symbol	Name	Function
1	V_{LC}	Power	Power source for LCD drive
2	BL-LED (–)	Terminal of Backlight LED	Cathode for green
3	GND	Ground	
4	V_{DD}	Power	Power source for logic circuit
5	Din	Data Input	Display serial data bit. Note: to map the display data, because of the difference between the number of internal shift register data (40) and the single line of LCD pixels (36), the first four bits of data shifted will be dummy bits.
6	SCP	Serial Clock Pulse	Clock used by 40-bit internal shift register of the switch, shifting the display data bit presented at Din at falling edge.
7	LP	Latch Pulse	Line data latch pulse will latch content of internal 40-bit shift register at falling edge for one line of display. LP will also increment the display line by one.
8	BL-LED (–)	Terminal of Backlight LED	Cathode for red
9	FLM	First Line Marker	The marking signal for the first line data of LCD display. The first line of LCD will be selected by the falling edge of LP signal during the high level (FLM).
10	BL-LED (+)	Terminal of Backlight LED	Anode for common
11	Dout	Data Output	Display serial output. Can be used to connect to Din of the next SMARTDISPLAY. As a result, many SMARTDISPLAYS can be controlled with one clock and data signal.
12	BL-LED (–)	Terminal of Backlight LED	Cathode for blue

进口OLED显示屏按钮开关价格查询　全国统一热线 4006-022-002　www.shuntu.net　shunto@126.com

视频开关OLED进口视频切换开关　智能化开关日本显示屏按钮开关说明书　OLED开关选型样本pdf资料
智能开关智能按钮开关OLED显示屏开关　播放开关映像设备开关音响开关　可编程开关OLED按钮开关OLED按键开关

SUPER BRIGHT LED SPECIFICATIONS

Typical Electrical Characteristics (Temperature at 25°C)

Backlight Color	Symbols	Red/Green	Yellow	Yellow/Green	Unit
Forward Current	I_F	15/15	15	15/15	mA
Forward Voltage	V_F	2.1/3.3	2.2	2.2/3.3	V

ABSOLUTE MAXIMUM FOR SUPER BRIGHT LEDS

Electrical Characteristics (Temperature at 25°C)

Backlight Color	Symbols	All	Unit
Forward Current	I_F	20	mA
Reverse Voltage	V_R	4.0	V
Current Reduction Rate Above 25°C	ΔI_F(DC)	−0.26	mA/°C
Power Dissipation*	P_D	130	mW

*For uniform light emission, Power Dissipation should not exceed the Absolute Maximum Rating.

TYPICAL DISPLAY DIMENSIONS

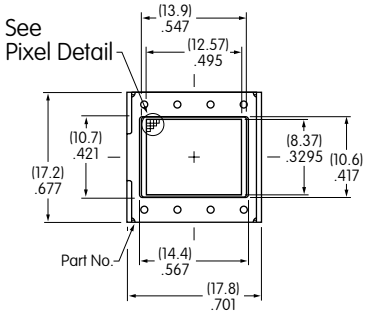

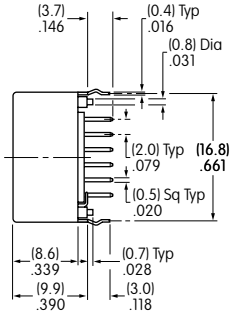

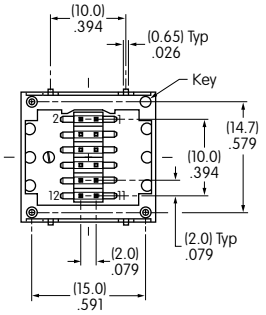

Terminal numbers are not on the device.

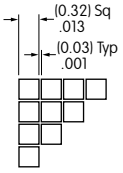

Pixel Detail

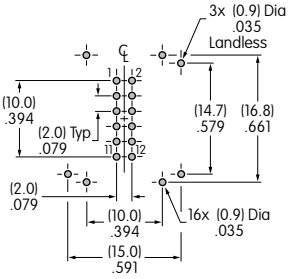

Footprint

进口OLED显示屏按钮开关价格查询　全国统一热线 4006-022-002　www.shuntu.net　shunto@126.com

视频开关OLED进口视频切换开关　智能化开关日本显示屏按钮开关说明书　OLED开关选型样本pdf资料
智能开关智能按钮开关OLED显示屏开关　播放开关映像设备开关音响开关　可编程开关OLED按钮开关OLED按键开关

SUPER BRIGHT RGB LED SPECIFICATIONS

Typical Electrical Characteristics (Temperature at 25°C)

Backlight Color	Symbols	Red	Green	Blue	Unit
Forward Current	I_F	10	10	10	mA
Forward Voltage	V_F	2.1	3.3	3.3	V

ABSOLUTE MAXIMUM FOR RGB LED

Electrical Characteristics (Temperature at 25°C)

Backlight Color	Symbols	Red/Green/Blue	Unit
Forward Current	I_F	20	mA
Reverse Voltage	V_R	4.0	V
Current Reduction Rate Above 25°C	ΔI_F(DC)	−0.27	mA/°C
*Power Dissipation	P_D	135	mW

*For uniform light emission, Power Dissipation should not exceed the Absolute Maximum Rating.

TYPICAL DISPLAY DIMENSIONS WITH RGB LED

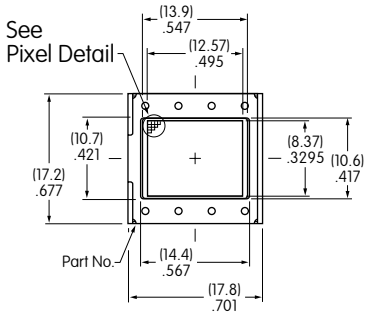

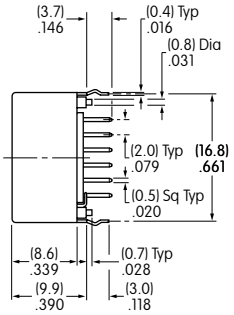

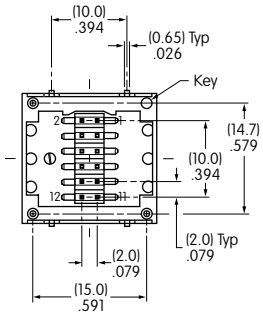

Terminal numbers are not on the device.

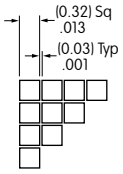

Pixel Detail

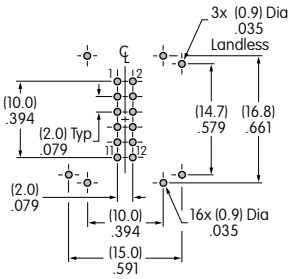

Footprint

进口OLED显示屏按钮开关价格查询　全国统一热线 4006-022-002　www.shuntu.net　shunto@126.com

视频开关OLED进口视频切换开关　智能化开关日本显示屏按钮开关说明书　OLED开关选型样本pdf资料
智能开关智能按钮开关OLED显示屏开关　播放开关映像设备开关音响开关　可编程开关OLED按钮开关OLED按键开关

DISTINCTIVE CHARACTERISTICS

Compact Size

- Perfect for rack mount router and other applications with space limitations.
  Compact body size: 19.0mm (.748") x 18.0mm (.709") compared to
  Standard body size: 23.13mm (.911") x 20.59mm (.811")
- Vibrant Illumination
- Low Energy Consumption

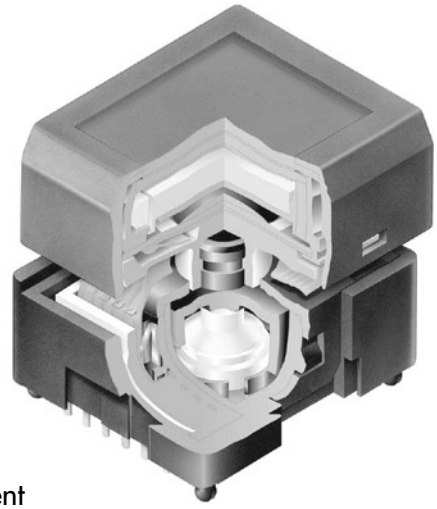

Programmable LCD

Variety of LED Backlighting Colors

Rubber Dome

Epoxy Sealed Straight PC Terminals

Snap-in standoff for easy, secure mounting and alignment

Programmable to display graphics, alphanumeric characters and animated sequences.
Integrated liquid crystal display provides wide viewing angle with high contrast and clarity.
Viewing area 13.0mm x 10.7mm (horizontal x vertical) at 36 x 24 pixels.
Dome gives crisp tactile feedback to positively indicate circuit transfer.
High reliability and long life of one million actuations minimum.
Epoxy sealed terminals prevent entry of solder flux and other contaminants.
Optional accessories available to simplify production process.

Actual Size

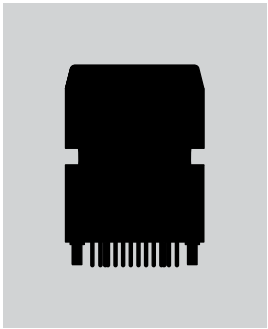

PART NUMBER & DESCRIPTION

Part Number	Switch Description	LCD Mode	LED Color
IS15SACP4CF	SPST Momentary ON Gold Contacts Straight PC Terminals	Yellow STN Positive	* Red/Green Standard
IS15SBCP4CF		Yellow STN Positive	* Red/Green Super Bright
IS15SBCP4EF		Yellow STN Positive	* Yellow/Green Super Bright
IS15SBFP4B		Black & White FSTN Positive	White Super Bright
IS15SBFP4RGB		Black & White FSTN Positive	** Red/Green/Blue RGB

* Simultaneous illumination of both colors achieves third color. ** Simultaneous RGB illumination achieves infinite colors.
Note: Contact factory for additional options.

进口OLED显示屏按钮开关价格查询　全国统一热线 4006-022-002　www.shuntu.net　shunto@126.com

视频开关OLED进口视频切换开关　智能化开关日本显示屏按钮开关说明书　OLED开关选型样本pdf资料
智能开关智能按钮开关OLED显示屏开关　播放开关映像设备开关音响开关　可编程开关OLED按钮开关OLED按键开关

SWITCH SPECIFICATIONS

Circuit	SPST normally open
Electrical Capacity (Resistive Load)	100mA @ 12V DC
Contact Resistance	200 milliohms maximum @ 20mV 10mA
Insulation Resistance	100 megohms minimum @ 100V DC
Dielectric Strength	125V AC for 1 minute minimum
Mechanical Endurance	1,000,000 operations minimum

Electrical Endurance	1,000,000 operations minimum
Operating Force	2.2 ± 0.5 Newtons
Total Travel	1.8mm (.071")
Operating Temperature Range	0°C ~ +40°C (+32°F ~ +104°F)
Storage Temperature Range	−10°C ~ +60°C (+14°F ~ +140°F)

LCD SPECIFICATIONS

Characteristics of Display

Display Operation Mode	STN positive, FSTN positive
Display Condition	Transflective with built-in LED backlight
Viewing Angle	Adjustable
Driving Method	1/24 duty. 1/5 bias (built-in driving circuit)
Viewing Area	13.0mm x 10.7mm (horizontal x vertical)
Pixel Format	36 x 24 pixels (horizontal x vertical)
Pixel Size	0.32mm x 0.32mm (horizontal x vertical)
Backlight LED	**Single color:** white. **Bicolor:** red/green, yellow/green. **RGB:** red/green/blue

Absolute Maximum Ratings (Temperature at 25°C)

Items	Symbols	Ratings
Supply Voltage for Logics	V_{DD}	−0.3V to +7.0V
Supply Voltage for LCD	V_{LC}	−0.3V to +12.0V
Input Voltage	V_I	−0.3V to V_{DD} +0.3V
Output Voltage	V_O	−0.3V to V_{DD} +0.3V

Recommended Operating Conditions (Temperature at 25°C)

Items	Symbols	Minimum	Typical	Maximum
Supply Voltage for Logics	V_{DD}	4.5V	5.0V	5.5V
Supply Voltage	V_{LC}	—	7.3V	—
Input Voltage	V_I	0V	—	V_{DD}
Driving Frequency	f_{FLM}	—	150Hz	—

DC Characteristics of LCD Drive IC (Temperature at 0°C to 40°C and V_{DD} = ±10%)

Items	Symbols	Test Conditions	Minimum	Typical	Maximum	Unit
High Level Input Voltage	V_{IH}		0.7 V_{DD}		V_{DD}	V
Low Level Input Voltage	V_{IL}		0		0.3 V_{DD}	V
High Level Input Leakage Current	I_{LIH}	$V_I = V_{DD}$			10	μA
Low Level Input Leakage Current	I_{LIL}	V_I = 0V			−10	μA
High Level Output Voltage	V_{OH}	I_{CH} = −500μA	V_{DD} −0.5			V
Low Level Output Voltage	V_{OL}	I_{OL} = 500μA			0.5	V
High Level Output Leakage Current	I_{LOH}	$V_O = V_{DD}$			10	μA
Low Level Output Leakage Current	I_{LOL}	V_O = 0V			−10	μA
Supply Current	I_{DD}	f_{SCP} = 1.0MHz			500	μA
LCD Drive Current	I_{LC}	f_{LP} = 2.4kHz V_{LC} = 7.3V		500	2,000	μA

Timing Characteristics of LCD Drive IC

(Temperature at 0°C to 40°C and V_{DD} = 5.0V ±10%)

Items	Symbols	Minimum	Maximum
Clock Operation Frequency	f_{SCP}		6.0MHz
Latch Pulse Frequency	f_{LP}		50kHz
Clock High Level Pulse Width	t_{CWH}	70ns	
Clock Low Level Pulse Width	t_{CWL}	70ns	
Data Setup Time	t_{DSD}	45ns	
Data Hold Time	t_{DHD}	50ns	
Data Output Delay Time	t_{PDO}		25ns
Latch Setup Time	t_{DSL}	50ns	
Latch Hold Time	t_{DHL}	50ns	
Latch High Level Width	t_{LWH}	200ns	
FLM Setup Time	t_{DSF}	50ns	
FLM Hold Time	t_{DHF}	50ns	
SCP, LP Rise/Fall Time	t_r/t_f		15ns

Timing Diagram

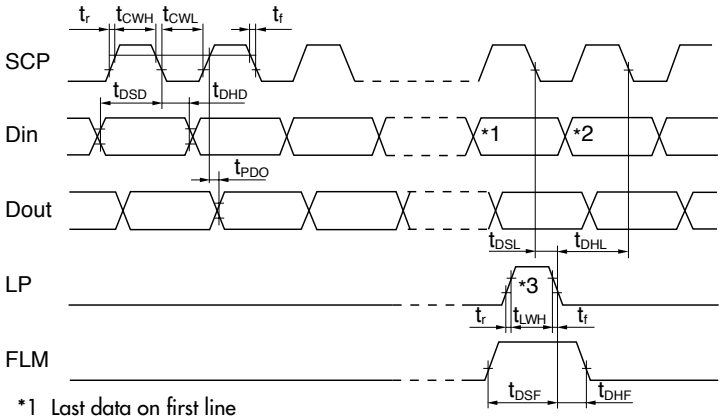

*1 Last data on first line
*2 Beginning data on second line
*3 Location of LP signal on first line

进口OLED显示屏按钮开关价格查询　全国统一热线 4006-022-002　www.shuntu.net　shunto@126.com

视频开关OLED进口视频切换开关　智能化开关日本显示屏按钮开关说明书　OLED开关选型样本pdf资料
智能开关智能按钮开关OLED显示屏开关　播放开关映像设备开关音响开关　可编程开关OLED按钮开关OLED按键开关

BLOCK DIAGRAM & PIN CONFIGURATIONS

IS15SBCP4CF
Yellow LCD Mode

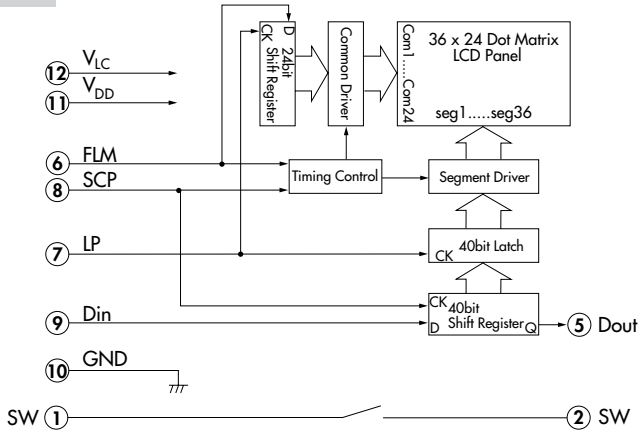

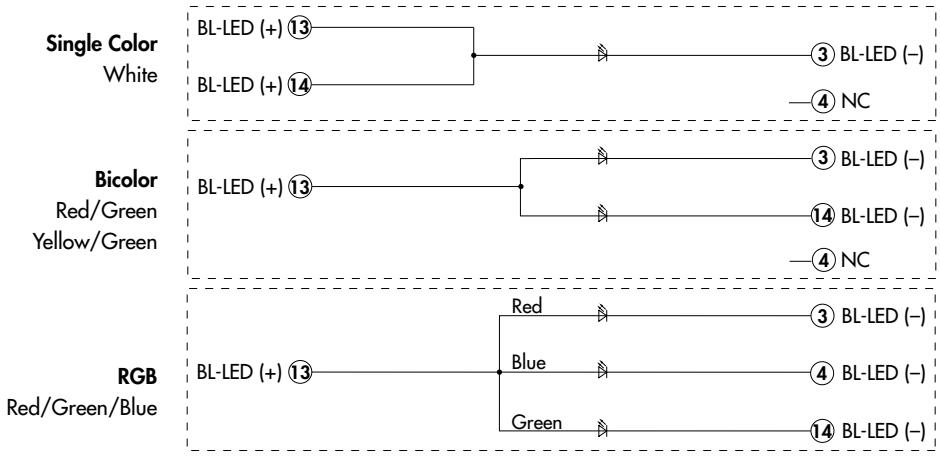

Pin No.	Symbol	Name	Function
1	**SW**	Terminal of Switch	Normally open
2	**SW**	Terminal of Switch	Normally open
3	**BL-LED (–)**	Terminal of Backlight LED	Cathode: **single color** - white; **standard bicolor** - green for red/green; **super bright bicolor** - red for red/green; yellow for yellow/green; **RGB** - red
4	**NC**	None	No connection for single color white. No connection for bicolor.
	BL-LED (–)	Terminal of Backlight LED	Cathode: **RGB** - blue
5	**Dout**	Data Output	Display serial output. Can be used to connect to Din of the next SMARTSWITCH. As a result, many SMARTSWITCHES can be controlled with one clock and data signal.
6	**FLM**	First Line Marker	The marking signal for the first line data of LCD display. The first line of LCD will be selected by falling edge of LP signal during the high level (FLM).
7	**LP**	Latch Pulse	Line data latch pulse will latch content of internal 40-bit shift register at falling edge for one line of display. LP will also increment the display line by one.
8	**SCP**	Serial Clock Pulse	Clock used by 40-bit internal shift register of the switch, shifting the display data bit presented at Din at falling edge.
9	**Din**	Data Input	Display serial data bit. Note: to map the display data, because of the difference between the number of internal shift register data (40) and the single line of LCD pixels (36), the first four bits of data shifted will be dummy bits.
10	**GND**	Ground	
11	**V_{DD}**	Power	Power source for logic circuit
12	**V_{LC}**	Power	Power source for LCD drive
13	**BL-LED (+)**	Terminal of Backlight LED	Anode for common
14	**BL-LED (+)**	Terminal of Backlight LED	Anode: **single color** - white
	BL-LED (–)	Terminal of Backlight LED	Cathode: **standard bicolor** - red for red/green; **super bright bicolor** - green for red/green; green for yellow/green; **RGB** - green

进口OLED显示屏按钮开关价格查询　全国统一热线 4006-022-002　www.shuntu.net　shunto@126.com

视频开关OLED进口视频切换开关　智能化开关日本显示屏按钮开关说明书　OLED开关选型样本pdf资料
智能开关智能按钮开关OLED显示屏开关　播放开关映像设备开关音响开关　可编程开关OLED按钮开关OLED按键开关

STANDARD LED SPECIFICATIONS

Typical Electrical Characteristics (Temperature at 25°C)

Backlight Color	Symbols	Red/Green	Unit
Forward Current	I_F	15/15	mA
Forward Voltage	V_F	2.1/2.2	V

SUPER BRIGHT LED SPECIFICATIONS

Typical Electrical Characteristics (Temperature at 25°C)

Backlight Color	Symbols	Red/Green	Yellow/Green	White	Unit
Forward Current	I_F	15/15	15/15	20	mA
Forward Voltage	V_F	2.1/3.3	2.2/3.3	3.6	V

RGB LED CHARACTERISTICS

Typical Electrical Characteristics (Temperature at 25°C)

Backlight Color	Symbols	Red	Green	Blue	Unit
Forward Current	I_F	10	10	10	mA
Forward Voltage	V_F	2.1	3.3	3.3	V

ABSOLUTE MAXIMUM FOR ALL LEDS

Electrical Characteristics (Temperature at 25°C)

Backlight Color	Symbols	White	Bicolor	RGB	Unit
Forward Current	I_F	30	20	20	mA
Reverse Voltage	V_R	5.0	4.0	4.0	V
Current Reduction Rate Above 25°C	ΔI_F(DC)	–0.50	–0.26	–0.27	mA/°C
*Power Dissipation	P_D	120	130	135	mW

*For uniform light emission, Power Dissipation should not exceed the Absolute Maximum Rating.

TYPICAL SWITCH DIMENSIONS

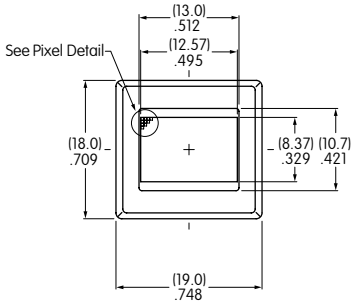

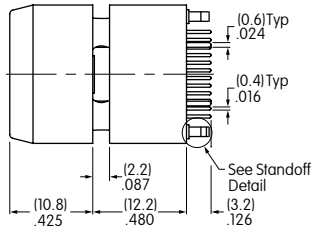

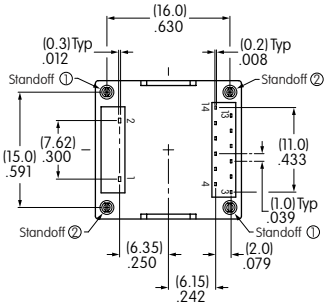

Terminal numbers are not on the switch.

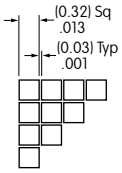

Pixel Detail

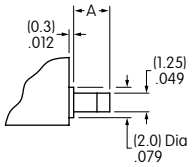

Standoff Detail

Dimension A

Standoff 1 = (2.7) .106　Standoff 2 = (2.3) .091

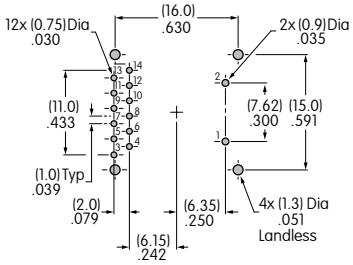

Footprint

进口OLED显示屏按钮开关价格查询　全国统一热线 4006-022-002　www.shuntu.net　shunto@126.com

视频开关OLED进口视频切换开关 智能化开关日本显示屏按钮开关说明书 OLED开关选型样本pdf资料
智能开关智能按钮开关OLED显示屏开关 播放开关映像设备开关音响开关 可编程开关OLED按钮开关OLED按键开关

PRECAUTIONS FOR HANDLING & STORAGE OF LCD 36 x 24 DEVICES

ATTENTION
ELECTROSTATIC
SENSITIVE DEVICES

Handling

1. The IS Series devices are electrostatic sensitive.
2. Limit operating force to keytop to 100.0N maximum, as excessive pressure may damage the LCD device.
3. The IS series devices are not process sealed.
4. If the LCD is accidentally broken, avoid contact with the liquid and wash off any liquid spills to the skin or clothing.
5. Clean cap surface with dry cloth. If further cleaning is needed, wipe with dampened cloth using neutral cleanser and dry with clean cloth. Do not use organic solvent.
6. Recommended soldering time and temperature limits:

   Wave Soldering: see Profile B in Supplement section.

   Manual Soldering Switches: see Profile A in Supplement section.

   Manual Soldering Displays: see Profile B in Supplement section.
7. Do not exceed 60°C at the LCD level.

Storage

1. Store in original container and away from direct sunlight.
2. Keep away from static electricity.
3. Avoid extreme temperatures, high humidity, gaseous substances, and all forms of chemical contamination.

进口OLED显示屏按钮开关价格查询 全国统一热线 4006-022-002 www.shuntu.net shunto@126.com

视频开关OLED进口视频切换开关　智能化开关日本显示屏按钮开关说明书　OLED开关选型样本pdf资料
智能开关智能按钮开关OLED显示屏开关　播放开关映像设备开关音响开关　可编程开关OLED按钮开关OLED按键开关

OPTIONAL ACCESSORIES

AT548 Panel Mount Housing

Material: Polyamide

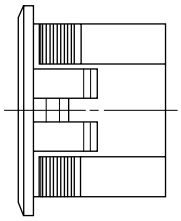

Panel mount housing allows the LCD 36 x 24 Pushbutton to be snapped into a panel cutout for quick, secure mounting. It gives flexibility in locating the devices anywhere on the panel. It also allows using the LCD 36 x 24 Pushbutton on an existing panel.

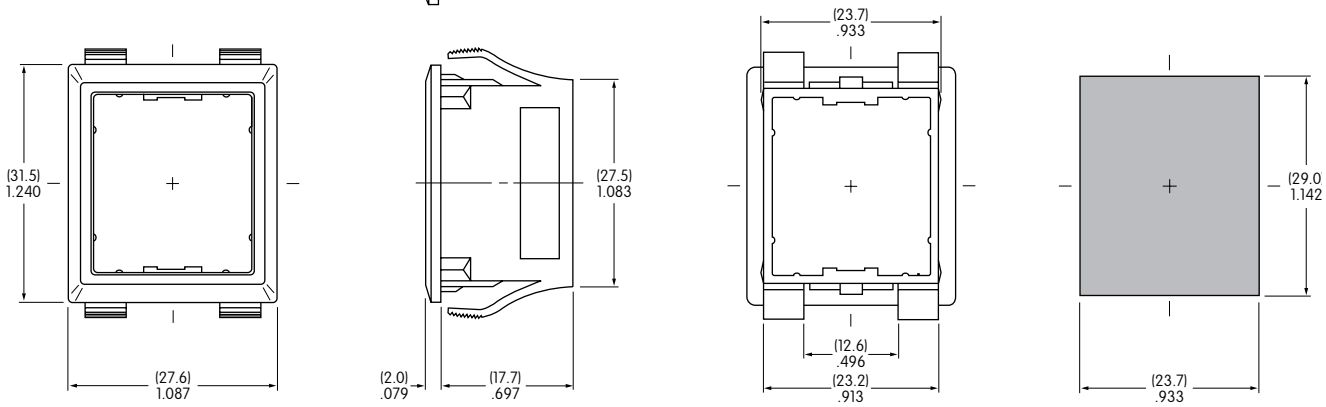

The Panel Mount Housing is available for the LCD 36 x 24 Pushbutton only.

Panel Thickness Range:
(1.5 ~ 4.0mm) .059 ~ .157″

AT542 Coupler

Material: PBT

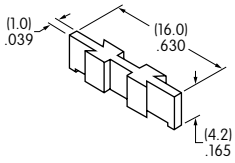

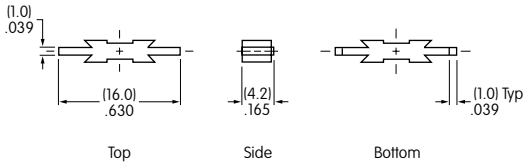

This coupler is for connecting the LCD 36 x 24 Pushbutton into precise, tight groupings that maintain an even distance from PCB to top of the actuator.

The Coupler is available for the LCD 36 x 24 Pushbutton only.

进口OLED显示屏按钮开关价格查询　全国统一热线 4006-022-002　www.shuntu.net　shunto@126.com

视频开关OLED进口视频切换开关　智能化开关日本显示屏按钮开关说明书　OLED开关选型样本pdf资料
智能开关智能按钮开关OLED显示屏开关　播放开关映像设备开关音响开关　可编程开关OLED按钮开关OLED按键开关

OPTIONAL ACCESSORIES

AT9704-02YC Socket for Single and Bicolor LCD 36 x 24 Pushbutton

Materials:

Base - Glass Fiber Reinforced PBT
Terminals - Brass/Beryllium Copper

- The socket permits the SMARTSWITCH™ to be plugged in after automated processing.
- Use of the socket enables easy field replacement of the device.

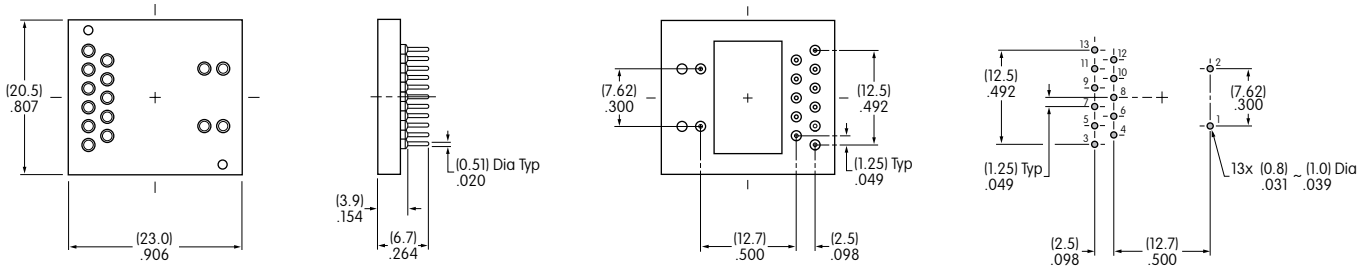

AT9704-065E Socket for RGB LCD 36 x 24 Pushbutton *NEW*

Materials:

Base - Glass Fiber Reinforced PBT
Terminals - Brass/Beryllium Copper

- The socket permits the RGB SMARTSWITCH™ to be plugged in after automated processing.
- Use of the socket enables easy field replacement of the device.

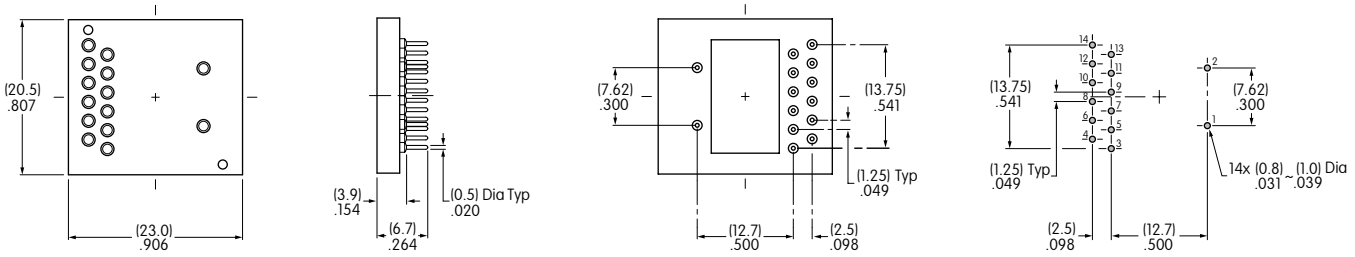

AT9704-065F Socket for Compact Pushbutton (All Models)

Materials:

Base - Glass Fiber Reinforced PBT
Terminals - Brass/Beryllium Copper

- The socket permits the Compact SMARTSWITCH™ to be plugged in after automated processing.
- Use of the socket enables easy field replacement of the device.

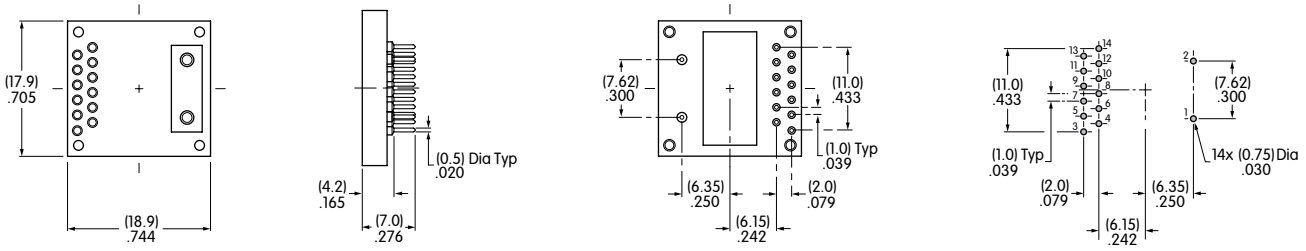

Note: AT9704-065F Socket may be used with the Compact 64 x 32 SMARTSWITCH™ by removing pins 3, 4, 11, 12, 13 and 14.

进口OLED显示屏按钮开关价格查询　全国统一热线 4006-022-002　www.shuntu.net　shunto@126.com

视频开关OLED进口视频切换开关　智能化开关日本显示屏按钮开关说明书　OLED开关选型样本pdf资料
智能开关智能按钮开关OLED显示屏开关　播放开关映像设备开关音响开关　可编程开关OLED按钮开关OLED按键开关

OPTIONAL ACCESSORIES

AT9704-085K Socket for LCD 64 x 32 Pushbutton NEW

Materials:

Base - Glass Fiber Reinforced PBT
Terminals - Brass/Beryllium Copper

- The socket permits the SMARTSWITCH™ to be plugged in after automated processing.
- Use of the socket enables easy field replacement of the device.

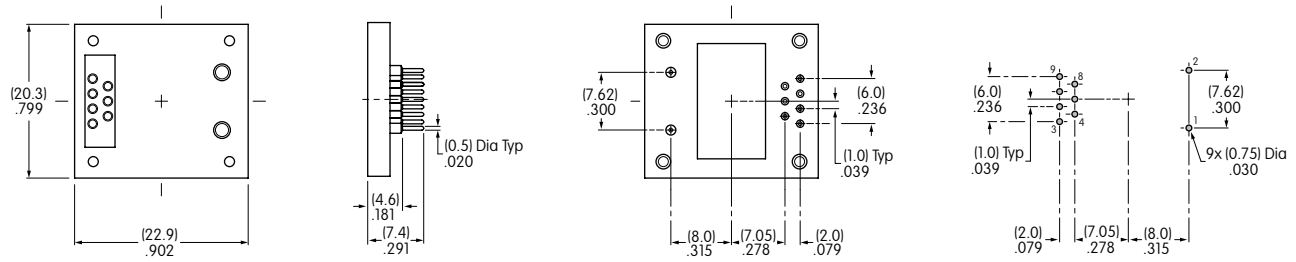

AT9704-085L Socket for OLED Pushbutton NEW

Materials:

Base - Glass Fiber Reinforced PBT
Terminals - Brass/Beryllium Copper

- The socket permits the OLED SMARTSWITCH™ to be plugged in after automated processing.
- Use of the socket enables easy field replacement of the device.

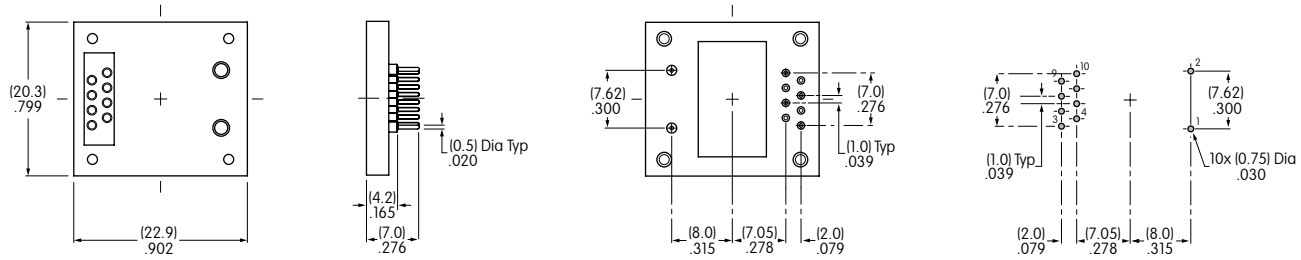

AT9704-085M Socket for OLED Display NEW

Materials:

Base - Glass Fiber Reinforced PBT
Terminals - Brass/Beryllium Copper

- The socket permits the OLED SMARTDISPLAY™ to be plugged in after automated processing.
- Use of the socket enables easy field replacement of the device.

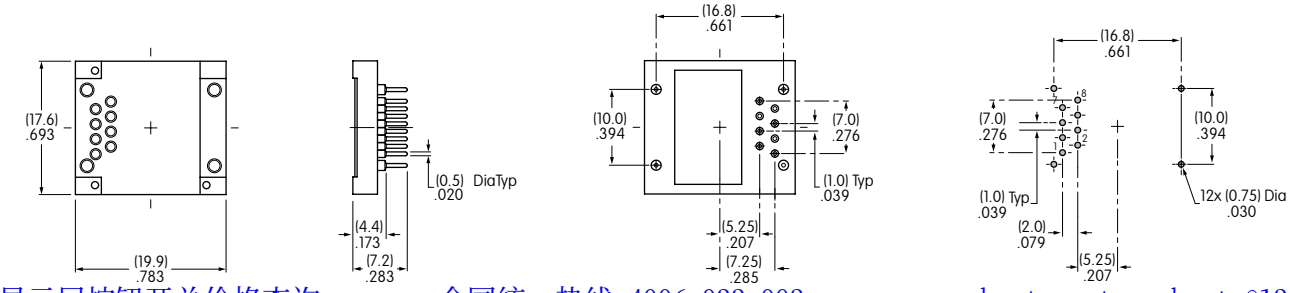

进口OLED显示屏按钮开关价格查询　全国统一热线 4006-022-002　www.shuntu.net　shunto@126.com