SR84/85

This robust medium type magnetic scale system that outputs position signals for machine tools and other equipment that require high-precision positioning.

- Measuring Length(ML) : 140-3,040mm
- Accuracy : 3+3ML/1,000 μm p-p,
  5+5ML/1,000 μm p-p
- Maximum resolution : 0.01 μm
- Maximum response speed : 200m/min.
- Protocol (SR85) : Mitsubishi

Robust type

Maximum resolution 0.01 μm (SR85 only)

Magnescale PRECISE IN PRECISION

Specifications

Model	SR84	SR85
Measuring length (ML)	140~3040mm 140, 240, 340, 440, 540, 640, 740, 840, 940, 1040, 1140, 1240, 1340, 1440, 1540, 1640, 1740, 1840, 2040, 2240, 2440, 2640, 2840, 3040	
Thermal expansion coefficient (/ ℃)	12 ± 1 x 10^{-6}/ ℃	
Output signal	A/B, Reference point line driver signal (compliant with EIA-422)	Incremental serial bidirectional signal, compliant with EIA-485
Accuracy (at 20 ℃) ML:mm	3+3ML/1,000 μm p-p or 5+5ML/1,000 μm p-p	
Resolution	Selectable from 0.05,0.1,0.5 and 1.0 μm (Set at factory shipping)	Selectable from 0.01,0.05,0.1,0.5 and 1.0 μm (Set at factory shipping)
Reference point	None, Center point, Multi-point (40 mm pitch), Reference mark (standard pitch: 20 mm), User-selected point (1 mm pitch)	None, Center point, User-selected point (1 mm pitch)
Power supply voltage	DC4.75 - 5.25V(At cable connection end)	
Consumption current	200 mA (at 120 Ω terminal) max.	
Inrush current	2A max. (When the power supply rise time is 10 ms)	
Maximum response speed	50m/min(Resolution: 0.1 μm, Minimum phase difference: at 50 ns)	200m/min (User-selected resolution setting)
Vibration resistance	250 m/s² (50Hz~2kHz)	
Impact resistance	450m/s² (11ms)	
Protective design grade	IP54 (Air purge not included), IP65 (Air purge included)	
Other protections	Oil lubricant can also be used under severe environmental conditions.	
Power supply protection	In the case of errors such as a reverse-connected power supply or over-voltage, the internal fuse is cut to protect the power being supplied and wiring.	
Safety standards	FCC Part15 Subpart B Class A. ICES-003 Class A Digital Device. EN55011 Gp1 Class A, EN61000-6-2. Safety standards not applicable (60 V DC or less).	
Operating temperature range(℃)	0 ~ +50 ℃	
Storage temperature range(℃)	-20 ~ +55 ℃	
Mass	Approx.1.24kg + 4kg/m	
Slider sliding resistance	1N or less	

Model	CH33-**CP	CH33-**CE
Description	Cable with open end	Cable with open end
Cable length	3,5,10,15m	
Material	PVC	PU
Armor	YES	YES

*Please consult with our sales for the cable length other than above.

Details of model designation

SR84-× × × ★ ○ △ ◆ □ □ □
SR85-× × × ★ ○ △ ■ □ □ □

Minimum phase difference

Single reference mark shown by mm from left end of ML e.g. 850mm = 850, in case of center then X For 1000mm or longer, 2 left digits shown by alphabet

1,000~1,099mm	A	1,400~1,499mm	E	1,800~1,899mm	J
1,100~1,199mm	B	1,500~1,599mm	F	1,900~1,999mm	K
1,200~1,299mm	C	1,600~1,699mm	G	2,000~2,040mm	L
1,300~1,399mm	D	1,700~1,799mm	H	Ex:1,050mm → A50	

Specific mark : X=center, SR85 is only single reference mark.

Phase difference (ns)			
50	A	500	H
100	B	650	J
150	C	1000	K
200	D	1250	L
250	E	2500	M
300	F	3000	N
400	G		

Communication protocol

NC Maker	Wire	
Mitsubishi	2	B
	4	D

Resolution & Direction*

Resolution (μm)	SR84 +	SR84 −	SR85 +	SR85 −
0.01	-	-	A	F
0.05	B	G	B	G
0.1	C	H	C	H
0.5	D	J	D	J
1.0	E	K	E	K

Accuracy grade A : 5+5ML/1000 S : 3+3ML/1000μm
ML:Measuring length by mm
Cable out direction: R= Right, L= Left
Measuring length by cm

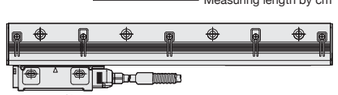

When the slider is moved in the direction of the arrow, the A signal is ahead when the direction is "positive,"and B signal is ahead when the direction is "negative."

上海迈信茂 F.021-31002800
F.021-31002811

上海迈信科技
F021-31002800
F021-31002811

Dimensions SR84/85
Cable Direction Right

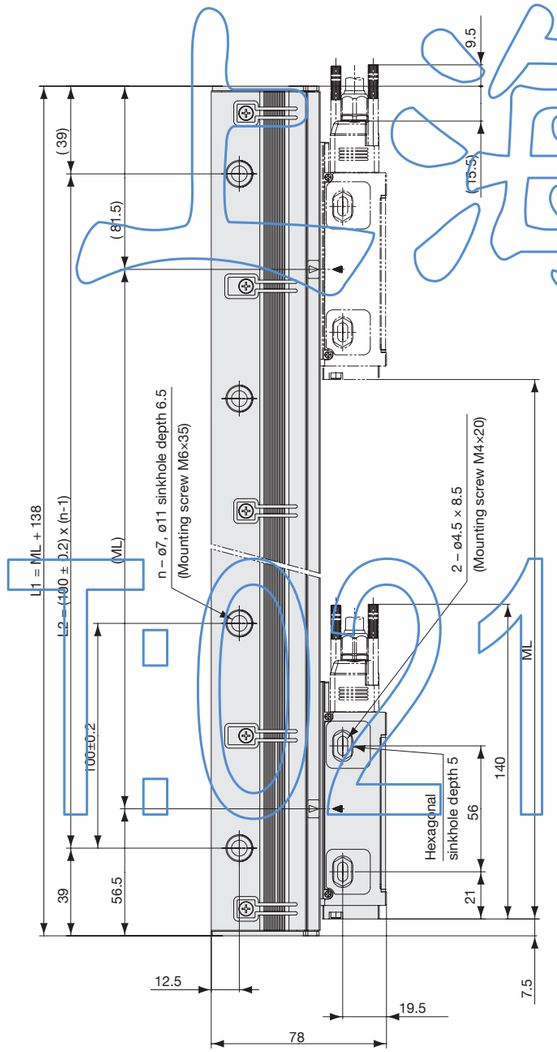

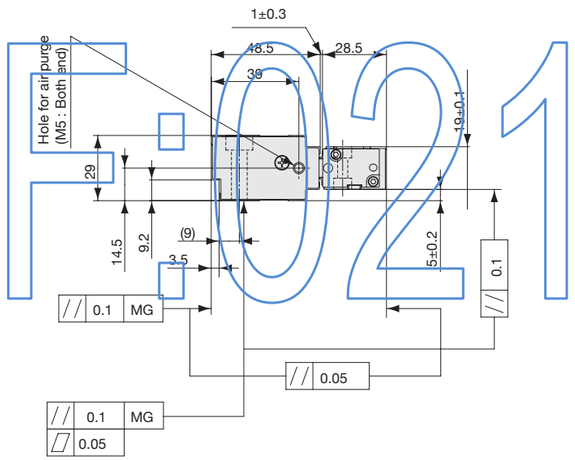

ML	L1	L2	n	ML	L1	L2	n
140	278	200	3	1340	1478	1400	15
240	378	300	4	1440	1578	1500	16
340	478	400	5	1540	1678	1600	17
440	578	500	6	1640	1778	1700	18
540	678	600	7	1740	1878	1800	19
640	778	700	8	1840	1978	1900	20
740	878	800	9	2040	2178	2100	22
840	978	900	10	2240	2378	2300	24
940	1078	1000	11	2440	2578	2500	26
1040	1178	1100	12	2640	2778	2700	28
1140	1278	1200	13	2840	2978	2900	30
1240	1378	1300	14	3040	3178	3100	32

ML : Measuring length CL : Cable length MG: Machine guide

Unit : mm

Unit : mm

Dimensions SR84/85
Cable Direction Left

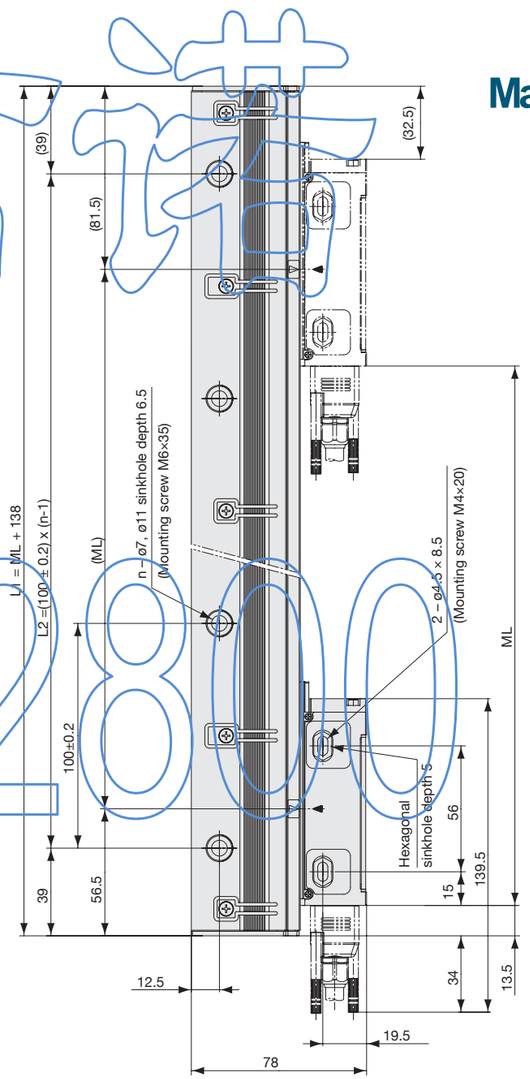

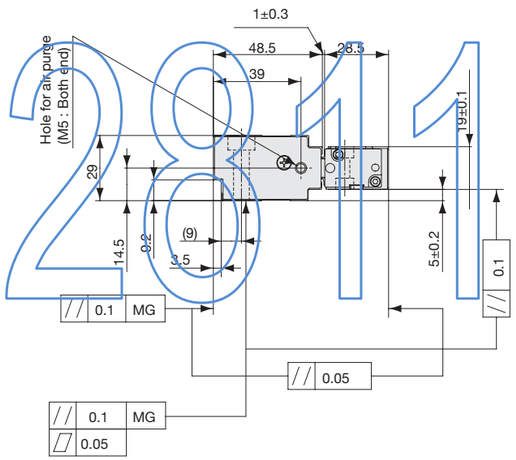

ML	L1	L2	n	ML	L1	L2	n
140	278	200	3	1340	1478	1400	15
240	378	300	4	1440	1578	1500	16
340	478	400	5	1540	1678	1600	17
440	578	500	6	1640	1778	1700	18
540	678	600	7	1740	1878	1800	19
640	778	700	8	1840	1978	1900	20
740	878	800	9	2040	2178	2100	22
840	978	900	10	2240	2378	2300	24
940	1078	1000	11	2440	2578	2500	26
1040	1178	1100	12	2640	2778	2700	28
1140	1278	1200	13	2840	2978	2900	30
1240	1378	1300	14	3040	3178	3100	32

ML : Measuring length CL : Cable length MG: Machine guide

Unit : mm

Unit : mm